BMF 14T$_2$Pro

USER MANUAL TRAILER

BMF
BALTIC MACHINE FACTORY

Contents

1 INTRODUCTION 1
2 SAFETY 1
2.1 General 1
2.2 Safety distances 2
2.3 Hydraulic system 2
2.4 Operation 2
3 BASIC COMPONENTS 3
4 ACCESSORY 3
5 TECHNICAL DATA 3
5.1 Technical data 3
5.2 Dimensions 3
6 HYDRAULIC SYSTEM 4
6.1 Connection 4
6.2 Basic components 4
7 ASSEMBLY AND MOUNTING 4
7.1 Mounting forest crane to BMF Trailer 4
8 OPERATING INSTRUCTIONS 4
8.1 Connecting forest trailer to tractor 4
9 STORAGE INSTRUCTIONS 5
10 MAINTENANCE 5
10.1 Lubrication 5
11 SPARE PARTS 6
11.1 Basic parts 6
11.2 Drawbar spare parts 7
12 WARRANTY 7

1 INTRODUCTION

This manual gives you detailed overview about forest trailer **BMF 14T$_2$Pro**.

Read the manual carefully before you start using this machine. The manual contains essential directions for efficient and safe use of forest trailer. These instructions should always be followed.

This forest trailer is constructed to transport raw wood material from forest as well for transportation treated wood. Forest trailer is built for use with agricultural tractors. It has a unified connection junction for mounting BMF forest cranes.

This machine meets all technical standards and safety regulations of valid EU Machinery Directive and its amendments. Forest trailer is fitted out with CE marking.

User of forest trailer is obliged to be aware of and strictly follow all safety precautions and instructions described in this manual. In addition to this, instructions of local occupational safety authorities, as well national laws, regulations and highway codes, must be followed. Using the machine for other tasks, than those for which it is intended or exceeding its performance, is not allowed. The manufacturer/dealer is not responsible for damage caused by misuse of the forest trailer.

Pay attention to regular maintenance. In case there will occur problems during use of forest trailer, which are not covered in this manual, contact authorized dealer or manufacturer.

2 SAFETY

2.1 General

Read the manual carefully before you start using forest trailer. Use forest trailer only for purposes, what it is made for.
Driver must have proper valid license to drive tractor in connection with trailer and has sufficient training for that. Notice, avoid and prevent all potentially hazardous situations.

IT IS STRONGLY FORBIDDEN:

- **to use forest trailer in state of intoxication by alcohol, drugs or other psychoactive substances**
- **to exceed maximum loading values**
- **to use forest trailer for transporting people**
- **to rebuild forest trailer**
- **to use repairing materials without the producer's permission**

BEFORE YOU START LOADING, MAKE SURE THAT:

- **Forest trailer is fully in working condition**
- **You have full visibility over all the working area**
- **Forest trailer is placed on even ground**
- **Parking brake is engaged**

2.2 SAFETY DISTANCES

General safety distance for working with forest crane is 20 meters!

Follow special safety distance when working close to live electrical conductors

Rated voltage, kV	Safety area, m
Up to 0,5	2
Up to 20	10
35 – 110	25
220 – 330	40

Table 1 *Safety area*

2.3 HYDRAULIC SYSTEM

- Hydraulic system must be serviced by qualified and experienced hydraulics mechanic only
- Continually inspect the condition of hydraulic system. Repair all safety endangering defects immediately
- Before starting repair work or maintenance make sure, there is no pressure in hydraulic system
- Use safety goggles and gloves during repair work and maintenance
- Use original spare parts or parts recommended by the manufacturer
- Prevent oil dripping to the ground to avoid environment pollution
- In ecologically sensitive areas use bio-oil

2.4 OPERATION

- Ensure, that forest trailer is in good working condition
- Operating with damaged or defective machine is prohibited
- Ensure, that you have control over all the working area
- Prevent entering unauthorized persons to the working area
- Support legs must be used while forest trailer is being loaded
- Be sure not to endanger anyone while lowering the support legs
- Use parking brake while loading
- Do not load over the upper edge of safety screen
- Loading short logs be sure they are supported at least with two pairs of bolsters
- Follow strictly load limits stated by the manufacturer for certain trailer
- Pull the support legs up before moving forest trailer
- Release parking brake
- Pay extra attention driving with unlocked drawbar
- Prevent any hoses between trailer and tractor to be squashed on sharp turns
- For driving on roads lock drawbar in straight position with locking shaft
- Make sure signal lights are unfolded and working for driving on public roads
- Follow traffic regulations
- Max speed by manufacturer for certain forest trailer is 25 km/h
- Manufacturer is not responsible for damage or loss, caused by misuse or incorrect, careless and inappropriate use of the machine

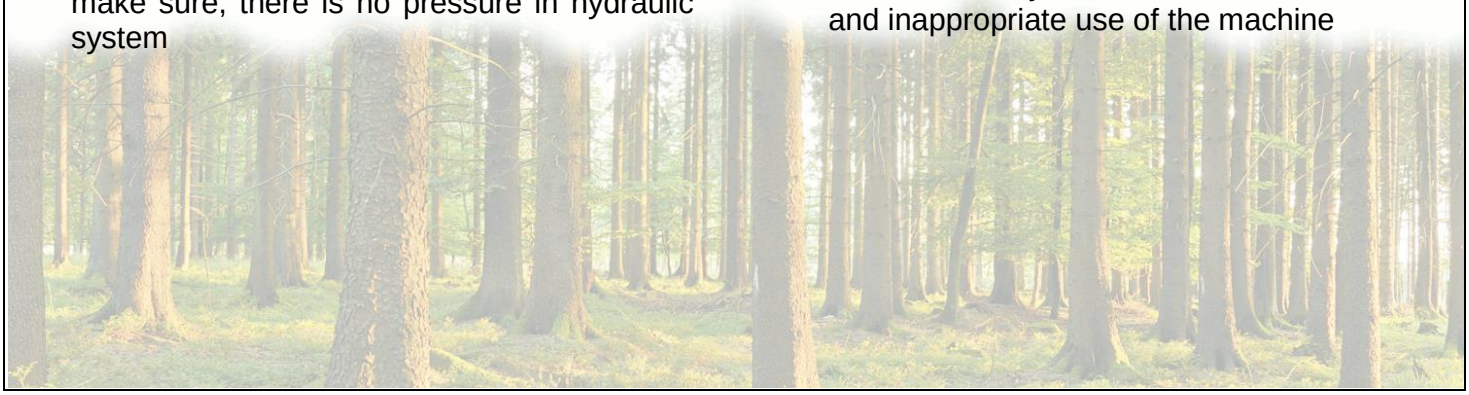

3 BASIC COMPONENTS

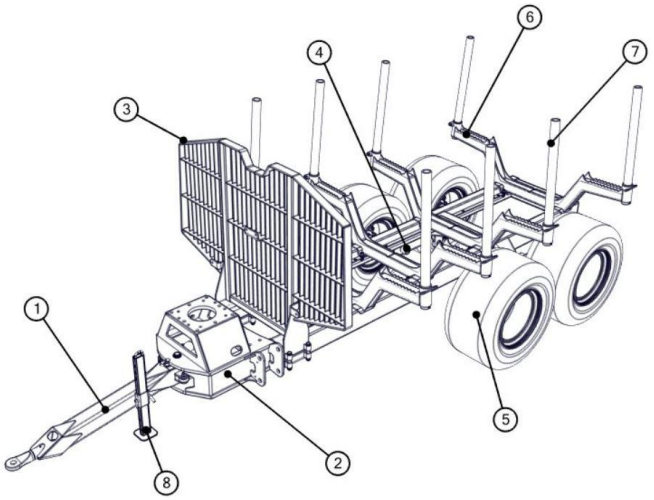

Figure 1 *Basic components of BMF 14T$_2$Pro*

1) Drawbar 2) Chassis, 3) Safety screen,
4) Bogie 5) Wheels 6) Load beam
7) Poles 8) Parking leg

4 ACCESSORY

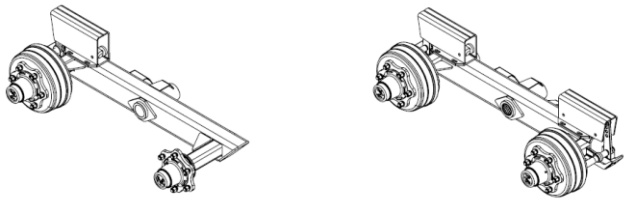

Figure 2 *Brakes on one axle or two axles*

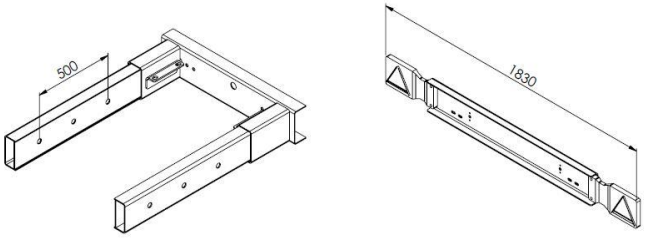

Figure 3 *Frame extension and signal lights frame*

5 TECHNICAL DATA

5.1 TECHNICAL DATA

Loading capacity, kg	14000
Total length, mm	6600
Length of loading area	4200
Total width with standard wheels,	2435
Standard wheels	550/45-22,5
Chassis, mm	2x(200x100x6)
Axels	80x80-8
Loading area, m²	2,45-2,8
Drawbar cylinders, pcs	2
Drawbar angle to sides, ± °	40
Clearance, mm	670
Support leg	A / FD

Table 2. *Forest trailer BMF 14T$_2$Pro technical data*
(Manufacturer reserves the right to change specifications without prior notice)

5.2 DIMENSIONS

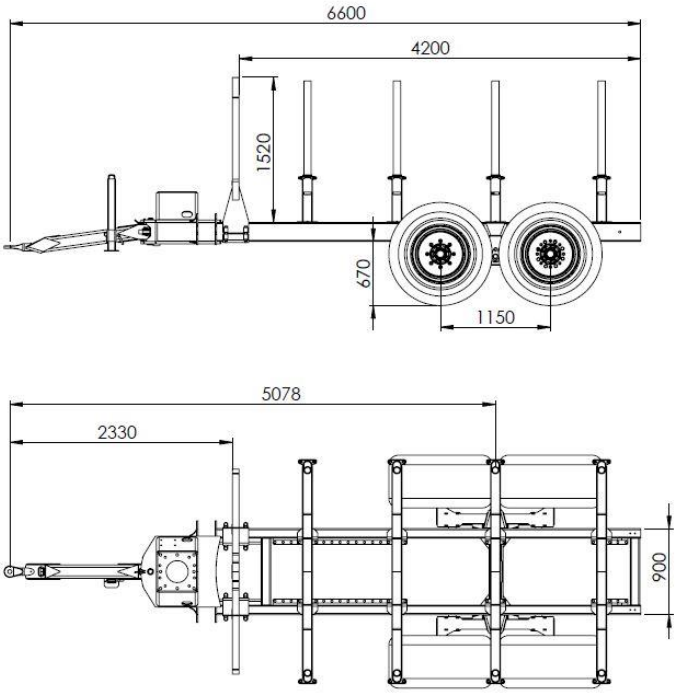

Figure 4 *Dimensions of BMF 14T$_2$Pro*

6 HYDRAULIC SYSTEM

6.1 CONNECTION

Connect trailer's hydraulic hoses to one of secti ons of tractor's control valve. Be sure all connections are properly locked. Unlock drawbar by removing locking shaft. Using lever of control valve section, where you connected forest trailer's hydraulic hoses, work carefully thru extreme positions of drawbar to both sides until turning cylinders are working smoothly.

6.2 BASIC COMPONENTS

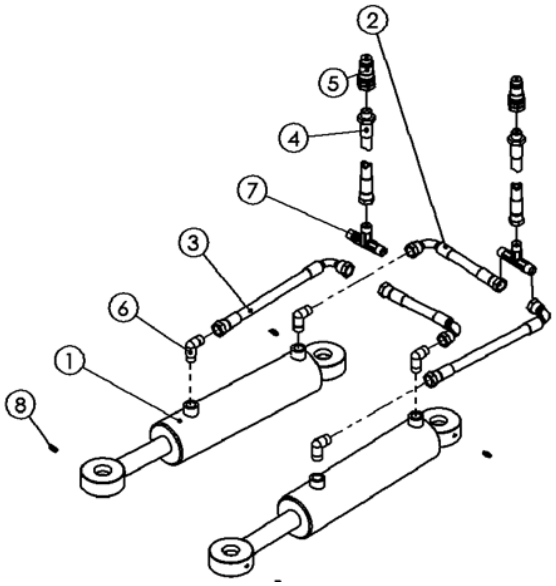

Figure 5 *Basic components*

Pos	Pcs	Part
1	2	Drawbar turning cylinder
2	2	Hydraulic hose 3/8 - 3/8 90
3	2	Hydraulic hose 3/8 - 3/8 90
4	2	Hydraulic hose 3/8 - 1/2 TR
5	2	1/2 quick coupling
6	4	3/8 L-nipple
7	2	3/8 T-nipple
8	4	Lubrication nipple M6 DIN 71412

Table 3 *Basic components of hydraulic system*

7 ASSEMBLY AND MOUNTING

Read these instructions before starting any assembly or mounting work.

Improper mounting can cause hazards during use of the forest trailer. Mounting, carried out in a manner other than specified in this manual, can expose the user to danger and will void the manufacturer's warranty.

7.1 MOUNTING FOREST CRANE TO BMF TRAILER

Mounting of forest crane should be performed at the dealer service center or by person authorized by the manufacturer or dealer. Mounting/detaching the crane can also be made by end user, if profession al equipment is used, all safety regulations are followed and at least one qualified mechanic is in present during all the mounting/detaching process.

Strength class for mounting bolts of support legs - trailer has to be 1 2.9(DIN912). Use self-locking nuts M24. Tightening torque for the mounting bolts is 660 Nm.

Retighten bolts after test run and after first 8 hours of use! Check after 40 working hours, tighten if needed. Later on do visual check

8 OPERATING INSTRUCTIONS

8.1 CONNECTING FOREST TRAILER TO TRACTOR

Before you hook up trailer with tractor ensure, that:

- tractor is enough powerful for this trailer
- tractor's hitch is in perfect working condition
- trailer is on even ground and fixed with wheel chocks
- trailer is in perfect working condition
- all hydraulic hoses on trailer are proparly connected

Before you start transport forest trailer ensure, that:

- forest trailer is hooked up and locked to tractor properly
- hydraulic hoses between trailer and tractor are connected properly
- trailer's brakes are released
- wheel chocks have been removed
- there is right air pressure in trailer's tyres
- drawbar is locked in straight position while driving on roads
- signal lights cable is connected to the tractor and lights are working properly

Adjust speed according to the road and weather conditions. Do not exceed the speed limit! Driving with the load be especially careful on turns!

9 STORAGE INSTRUCTIONS

Always switch the pump off before disconnecting hydraulic hoses from tractor's hydraulic system

- Clean forest trailer and if necessary, touch up any points, where paint has peeled off
- Lubricate forest trailer thoroughly (see lubricating instructions)
- Release pressure from the cylinders
- Protect drawbar turning cylinder's piston rods with grease
- Store forest trailer in a sheltered area(under the roof), avoid direct contact with ground

10 MAINTENANCE

10.1 LUBRICATION

Using the appropriate lubricants like Beacon EP2, Multipurpose GR Moly, Mobilux EP2, Mobil Grease MP Special, Energrease LS-EP2 or similar. Right lubricants guarantee troublefree operation of the machine.

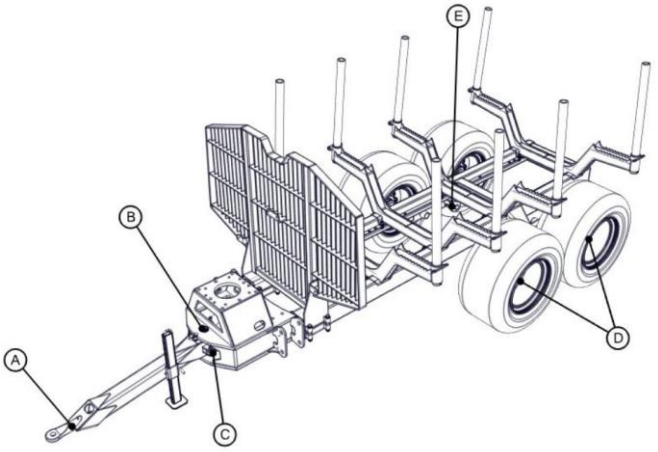

Figure 6 *Lubrication points of BMF 14T$_2$Pro*

Lubrication point	Pcs	Lubricant	Interval, working hour	Additional information
Drawbar eyelet, A	1	Grease	8	2% molybden sulfide
Shaft of drawbar, B	1	Grease	8	
Turning cylinder eyelet, C	2	Grease	8	
Rollerbearings of wheels, D	4	Grease	1x a year	
Shaft of boggie, E	2	Grease	8	

Table 4 *Lubrication*

11 SPARE PARTS

11.1 BASIC PARTS

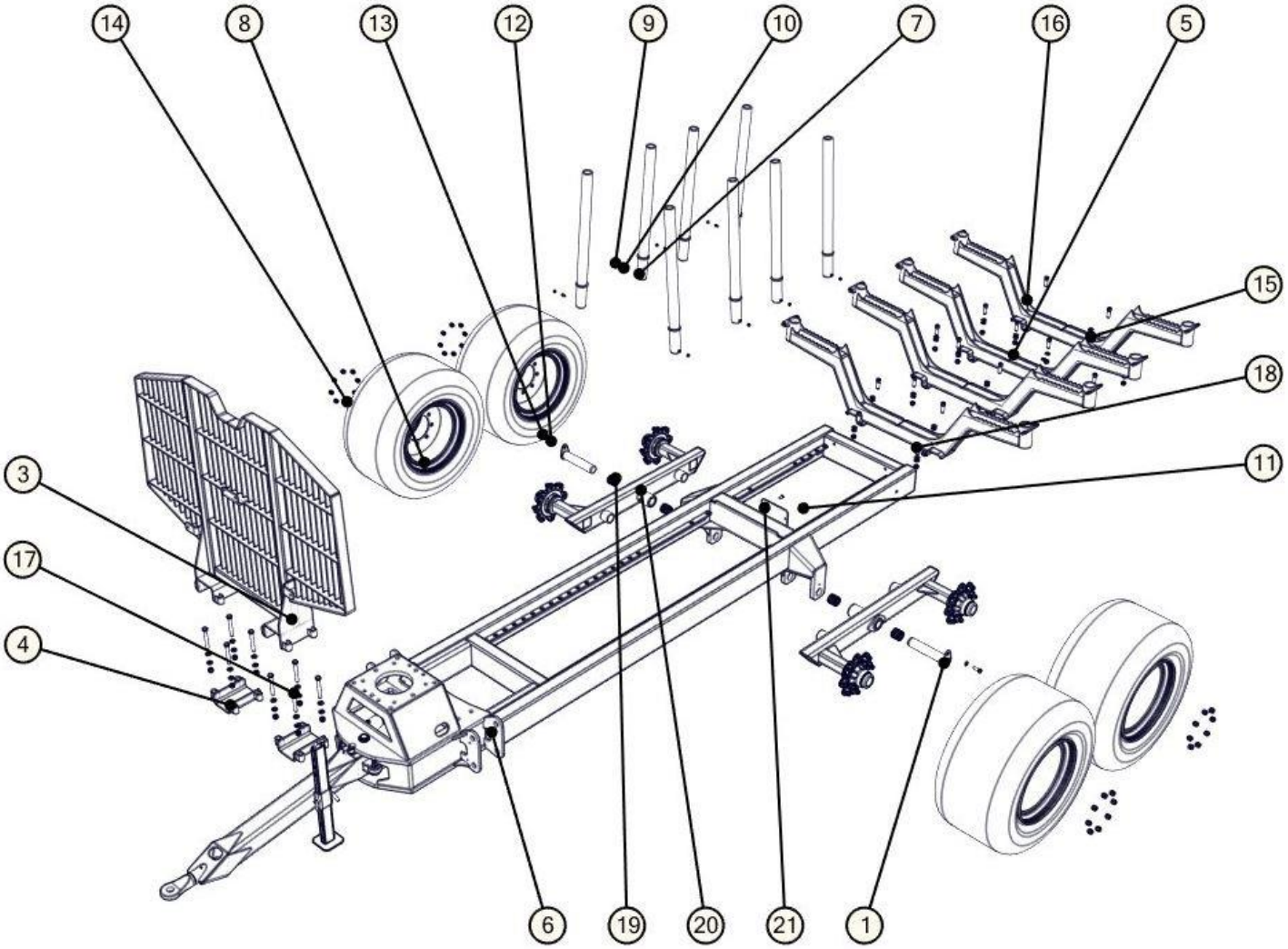

Figure 7 *Spare parts of BMF 14T$_2$Pro forest trailer*

NR	Part	Name	Qty
1	112.03.03.00	Shaft of boggie	2
3	132.05.00.00-L	Safety screen	1
4	132.05.01.00	Clog of safety screen	2
5	132.06.00.00	Load beam	4
6	132S.02.00.00-P3	Chassis	1
7	162.04.00.00	Bolster	8
8	550-45R22,5-1080ET50	Wheel	4
9	M10 DIN985	Nylock nut	8
10	M10x20 DIN912	8x8	8
11	M10x30 DIN933	8x8	2
12	M16 DIN_125	Washer	2
13	M16x30 DIN933	8x8	2
14	M18x1,5 DIN74361	Wheel nut	32
15	M20 DIN985	Nylock nut	24
16	M20 DIN_125	Washer	48
17	M20x160 DIN931	8x8	8
18	M20x60 DIN912	8x8	16
19	TFP6060	Bronze bearing 60x60	4
20	TV_1150_VV.03.00.00	Boggie	2
21	92.02.00.28	Cover	1

11.2 DRAWBAR SPARE PARTS

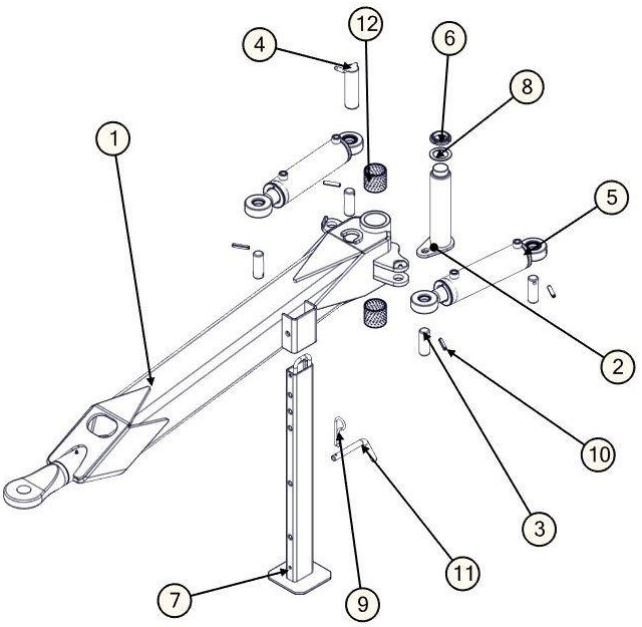

Figure 8 *Spare parts of drawbar*

NR	Part	Name	Qty
1	132.01.00.00	Drawbar	1
2	111.02.01.00-p1	Drawbar shaft	1
3	101.01.00.12-P1	Drawbar cylinder shaft	4
4	132S.01.01.00	Drawbar locking shaft	1
5	HC-70-40-200-420GE30x2-p1	Drawbar cylinder	2
6	M45x1,5DIN267	Locking nut	1
7	Parking leg		1
8	Seib-M45x1,5-d46D65	Locking nut washer	1
9	Splint_D5_DIN11024_B2	Parking leg pin	1
12	TFP6060	Bronze bearing 60x60	2
10	Torusplint_D10L50_DIN1481	Shaft locking pin	4
11	Tugijala-kinnitus	Parking leg shaft	1

Table 6 *Drawbar spare parts of BMF forest trailer*

12 WARRANTY

Product warranty is valid for one year starting from the date of delivery or issuing an invoice. Product warranty is valid only in case if:

- all instructions in this manual were followed
- during the maintenance original spare parts were used
- maintenance work was performed by the qualified specialist
- forest trailer was not overloaded
- proper pressure was used in the hydraulic system

Product warranty **is NOT VALID** in case of user's incompetence and/or irrespective handling of the equipment. Warranty does not cover transportation cost or loss of profit due to normal abrasion or product failure.

Producer:

OÜ Lisako