ORIGINAL INSTRUCTIONS - *according to Directive 2006/42/EC, Annex I 1.7.4.1*

OPERATOR'S MANUAL

R+ 760
R+ 820
Rake

Part number 81PIGB-185x
1st edition English
February 2018

KONGSKILDE

FOREWORD

DEAR CUSTOMER!

We appreciate the confidence you have shown to our company by investing in a JF product and congratulate you with your new purchase. Of course, it is our wish that you will experience complete satisfaction with the investment.

This instruction manual contains information about correct and safe use of the machine.

When buying the machine you will receive information about use, adjustment and maintenance.

However, this first introduction cannot replace a more thorough knowledge of the different tasks, functions and correct technical use of the machine.

Therefore you should read this instruction manual very carefully before using the machine. Pay special attention to the safety instructions.

This instruction manual is made so that the information is mentioned in the order you will need it, i.e. from the necessary operation conditions to use and maintenance. Besides this there are illustrations with text.

"Right" and "Left" are defined from a position behind the machine facing the direction of travel.

All the information, illustrations and technical specifications in this instruction manual describe the latest version at the time of publication.

Kongskilde Industries A/S reserves the right to make changes or improvements in the design or construction of any part without incurring the obligations to install such changes on any unit previously delivered.

CONTENTS

4. Mounting of the rake / preparation

5. Handling of the rake during working

6. Basic adjustment of the rake

7. Service and maintenance of the rake

8. Greasing

9. Machine disposal

10. Supplement

11. Warranty

1. IN GENERAL

This instruction manual contains important information concerning operation, maintenance and adjustment of the machine. Furthermore, all safety instructions are mentioned and emphasized. Read the instruction manual carefully before using the machine. The instruction manual should be accessible for the operator.
All safety instructions must be observed.

1.1 Intended use

- The rotary rake is intended for raking grass hay and straw crops on the ground.
- The rotary rake is solely constructed for usual work in agriculture.
- The rotary rake should only be connected to a tractor and driven by the PTO of the tractor.
- Any other use is regarded as not intended. The manufacturer is not responsible for any damage resulting from such use, the user bears that risk.
- Intended use also implies that the instructions and rules prescribed by the manufacturer are observed.
- The rotary rake should only be used, maintained and repaired by persons who, through relevant instructions and after reading the instruction manual, are familiar with the machine and, in particular, are informed of possible dangers.
- The following safety instructions as well as common rules concerning technical safety, working practices and road safety must be observed altogether.
- If changes are made on the machine and its construction without permission from the manufacturer, the manufacturer cannot be held responsible for any damage resulting from this.
- Intended use also implies that the rules prescribed by the manufacturer concerning operation, maintenance and service are observed.

1.2 Foreseeable misuse

- Sweeping of e.g. farmyards with the rake tines or brooms fastened to these is not allowed. There is a risk that e.g. stones are thrown out from the working area of the machine with danger of personal injury or damage to objects.
- Any use beyond the intended use is regarded as foreseeable misuse.

1.3 General safety instructions

The following is a brief description of the measures, which should be a matter of common knowledge to the operator.

1. Always disengage the PTO drive shaft, activate the parking brake and stop the tractor engine before you
   - lubricate the machine,
   - clean the machine,
   - maintain the machine.
   - adjust the machine.

2. Always use the transport safety device and the stop valves of the lifting cylinder during transport.

3. Never work under a raised rotor unless it is secured by means of stop blocks or other mechanical securing device.

4. Always block the tractor wheels before working on the machine.

5. Never start the tractor until all persons are safely away from the machine.

6. Make sure that all tools have been removed from the machine before starting the tractor.

7. Make sure that all guards are intact and have been mounted correctly.

8. The clothes of the operator must be tight-fitting. During work never wear loose clothes or have your hair hang down as it may be pulled in by the moving parts of the machine.

9. Always drive with the statutory lights and safety marking during transport on public road and at night.

10. Do not stand near the machine while it is working.

11. When mounting the PTO drive shaft check that the number and direction of RPM of the tractor matches those of the machine.

12. Before raising or lowering the rotors, check that no persons are near the machine or touching it.

13. Do not stand near the safety frames of the rake until all revolving parts have stopped moving.

14. Never use the machine for other purposes than what it has been constructed for.

15. Do not allow any children to be near when you are working with the machine.

16. Never stand between the tractor and the machine during connection and disconnection.

1.4 Technical data

1.4.1 Manufacturer's address

Kongskilde Industries A/S
DK-6400 Sønderborg – Denmark
Phone: +45-74125252

1.4.2 Certificates

- EC-Declaration of conformity

(See page 68)

1.4.3 Marking of the machine

The machine data are printed on the machine plate. The machine plate is placed in the right-hand side in the direction of travelling behind the suspension at the front frame.

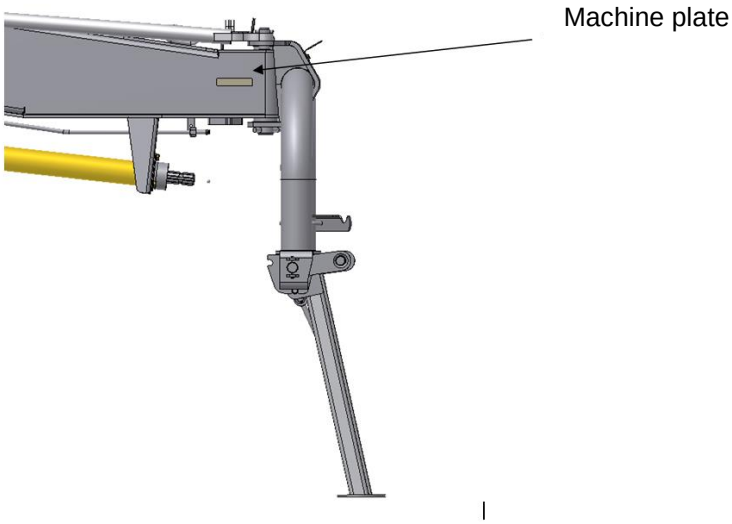

The marking on the machine should neither be changed nor removed!

The information on the machine plate can be written below so that it is always at hand.

Machine type	
Serial number	
Manufacturing year	

In case of service questions and when ordering spare parts, please state machine type, serial number and manufacturing year so that the inquiry can be treated as soon as possible.

Only use original JF spare parts. The manufacturer cannot be held responsible for any damage resulting from the use of non-original spare parts.

1.5.4 General technical data

Technical data:	R+760	R+820
Rotor diameter:	3.20 m	3.50 m
Tine arms per rotor:	12	
Double tines per tine arm:	4	
Working width, max:	7.60 m	8.20 m
Working width, min:	6.85 m	7.40 m
For alfalfa:	6.50	7.00 m
Swath widths	1.20 – 2.10 m	1.20 – 2.10 m
Transport height (without tines):	3.50 m	3.60 m
Transport height (with tines):	4.20 m (4.0 m – at link arm height 250 mm)	4.17 m (4.0 m – at link arm height 320 mm)
Transport width:	2.92 m / 2.99 m with wide wheels	
Length:	5.87 m	
PTO:	Maximum 540 rpm	
Speed:	Transport maximum 40 km/h	
Oil outlets required:	1 SA	
Transport wheels:	10.0/75-15.3	
Wide wheels (option):	13.0/55-16	
Wheels, rotor:	16x6,50-8 (10PR)	
Weight:	1930 kg	2010 kg

With mounted tine arms the R+760 [*R+820*] has a transport height of 4 m if the link arms are lowered to 250 mm [*320 mm*] above the ground.

On public road the maximum height of 4 m should <u>not</u> be exceeded!

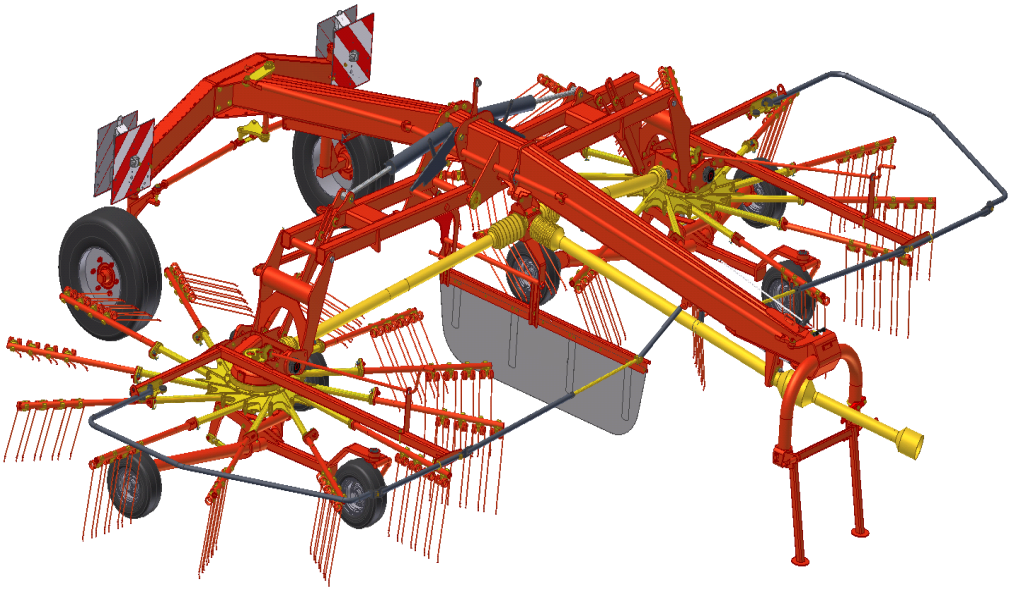

2. SAFETY

2.1 Marking of safety instructions in the instruction manual

In this instruction manual this symbol is used with reference to personal safety directly and indirectly through maintenance of the machine.

This symbol (safety marking according to DIN 4844-W9) is supplemented with the following references:

General references are marked with this symbol:

Reference signs on the machine must be observed and kept in a readable condition.

2.2 Safety rules and accident prevention

1. The safety instructions in this manual together with common rules concerning safety and accident prevention must be observed!

2. The warning and reference signs provide important information on safe operation and should be observed!

3. When driving on public road the current safety rules must be observed!

4. Before working with the machine you should make yourself familiar with all devices, operating elements and functions. During work this will be too late!

5. The clothes of the operator must be tight-fitting. Avoid loose clothes.

6. The machine should always be kept clean! Hereby you avoid danger of fire.

7. Always check the area around the machine before working, especially for children! Make sure that your view is sufficient!

8. Never allow anybody to be on the machine during work and transport.

9. The machine must be connected as per instructions and should only be secured/fastened at the prescribed devices!

10. During connection and disconnection the supports must be in the prescribed positions!

11. Particular care is required during connection and disconnection of machines!

12. The limits for allowable axle load, total weight and transport dimensions must be observed!

13. Transport equipment, e.g. lighting and warning kit as well as protection equipment must be checked and fitted.

14. Operating parts (cords, chains, rods etc.) for remote control equipment must be placed so that they do not cause unintended movements in transport and working position.

16. For road transport the machine must be prepared and locked according to the instructions of the manufacturer!

17. Never leave the tractor seat when driving!

18. Always adjust the driving speed to the conditions of the ground. When driving up and down and across hillsides, sharp turns should be avoided!

19. Driving, steering and braking capacity are influenced by mounted or trailed implements and ballast weights. Therefore please be aware of sufficient steering and braking capacity!

20. When turning pay attention to the overhang and/or oscillating weight of the machine!

21. Only use the machine if all guards are mounted correctly!

22. Nobody should be allowed to stand in the working area!

23. Do not stand in the turning and swivel area of the machine!

24. Hydraulically foldable frames should only be activated when there are no persons in the swivel area!

25. At remote-controlled (e.g. hydraulically controlled) units may be places where there is danger of injury!

26. Lower the machine to the ground, stop the engine and remove the ignition key before leaving the tractor!

27. Never stand between the tractor and the machine without securing the vehicle by means of the hand brake and/or stop blocks!

28. Always interrupt the operation of the rake when leaving the tractor seat.

2.2.1 Power take-off

1. Only use the PTO drive shafts prescribed by the manufacturer!

2. The protection tube and cover of the PTO and the PTO guard – also on the machine side – must be mounted and undamaged!

3. The tube overlap of the PTO shaft must be correct in transport and working position!

4. Always stop the PTO and the tractor engine and remove the ignition key before connecting or disconnecting the PTO drive shafts.

5. When using PTO shafts with overload or freewheel clutch which is not covered by the protective devices of the tractor, the overload/freewheel clutches must be placed on the machine side!

6. Always make sure that the PTO drive shaft has been mounted and secured correctly!

7. The guard of the PTO shaft is secured with the chain!

8. Before starting the PTO check that the number of RPM of the tractor PTO matches the number of RPM of the machine.

9. When using a travel speed controlled PTO, be aware that the number of rpm is depending on the travel speed and that the direction of rotation will change when backing!

10. Before starting the PTO check that there are no persons in the danger zone of the machine!

11. Never connect the PTO if the engine has stopped!

12. When working with the PTO make sure that no persons stand near the rotating PTO shaft.

13. Always stop the PTO if the deviation is too big or PTO is not used!

14. Caution! When the PTO has been stopped there will be a momentum! Do not get too close to the machine. Do not carry out any work on the machine until it has come to a complete stop!

15. Cleaning, greasing and adjustment of a PTO-driven machine or PTO shaft should only take place when the PTO has been disconnected, the engine stopped and the ignition key removed!

16. Place the disconnected PTO shaft in the holder!

17. After dismounting the PTO shaft remember to place the guard on the tractor PTO!

18. If the PTO shaft is damaged it must be repaired immediately before working with the machine!

2.2.2 Hydraulic system

1. The hydraulic system is under pressure!

2. When connecting the hydraulic cylinders it is important to be aware of the prescribed connection of the hydraulic hoses.

3. When connecting the hydraulic hoses to the tractor hydraulics, make sure that the hydraulic system of the tractor and the machine is <u>not</u> under pressure!

4. At hydraulic connections between tractor and machine, couplings should be marked to avoid misuse! Wrong connection (e.g. reverse function raise/lower) may cause accidents!

5. Hydraulic hoses should be checked regularly and be replaced in case of damage and if they are too old! New hoses must observe the technical requirements of the manufacturer!

6. To avoid injury it is important to use appropriate tools when searching for leakages!

7. Liquid (hydraulic oil) under high pressure can penetrate the skin and cause serious injury! In case of injury, consult a doctor immediately! Danger of infection!

8. Lower the machine to the ground, relieve the pressure of the system and stop the engine before working with the hydraulic system!

9. Hydraulic hoses must be replaced after 6 years.

2.2.3 Tyres

1. Before working on the tyres it must be ensured that the machine is stable and cannot move (by means of stop blocks)!

3. Mounting of wheels requires sufficient knowledge and correct mounting tools!

4. Repair of tyres and wheels should only be made by experts and with correct mounting tools!

5. Check the tyre pressure regularly! Observe the prescribed tyre pressure!

2.2.4 Working near high-voltage lines

1. Be very careful if working under or near high-voltage lines.

2. Make sure that the total height is as low as possible if working or transporting the machine near high-voltage lines.

3. If driving under overhead lines the driver must contact the owner of the overhead lines in order to get information on the rated voltage and minimum height of the overhead lines.

4. The safety distances in the table <u>must</u> be observed.

Rated voltage kV		Safety distance from overhead lines m
Up to	1	1
Over	1 to 110	2
Over	110 to 220	3
Over	220 to 380	4

2.2.5 Maintenance

In general:

When repairing or maintaining the machine it is especially important to ensure correct personal safety. Therefore, always park the tractor (if mounted) and the machine according to the GENERAL SAFETY RULES items 1-16 in the beginning of this instruction manual.

Screws and bolts on your new machine must be retightened after 5 hours of operation. This also applies if repairs have been made.

Torque measurement M_A (if nothing else has been stated).

A Ø	Klasse: **8.8** M_A [Nm]	Klasse: **10.9** M_A [Nm]	Klasse:**12.9** M_A [Nm]
M 8	25	33	40
M 10	48	65	80
M 12	80	120	135
M 12x1,25	90	125	146
M 14	135	180	215
M 14x1,5	145	190	230
M 16	200	280	325
M 16x1,5	215	295	350
M 18	270	380	440
M 20	400	550	650
M 24	640	900	1100
M 24x1,5	690	960	1175
M 30	1300	1800	2300

1. Maintenance, service, cleaning and repair must only take place when the PTO and the engine have been stopped! - Remove the ignition key! - Apply the hand brake of the tractor or secure the rake so that it cannot move!

2. Screws and nuts must be checked regularly and re-tightened if necessary!

3. If maintenance is going to be made on a machine in raised position, always secure it by means of appropriate supports!

4. Oil, grease and filter are disposed of as prescribed!

5. Cut off the power before working on the electric system!

6. If guards are exposed to wear they must be checked regularly and replaced in time.

7. Before carrying out electric welding on tractor and mounted machine the cable for generator and battery must be dismounted.

8. Spare parts must at least correspond to the technical requirements prescribed by the manufacturer! Original spare parts observe these requirements!

9. Before hydraulic connections are disconnected it must be ensured that the hydraulic system is not under pressure. The rotors must be lowered to the ground.

2.3 Placement of safety signs on the machine

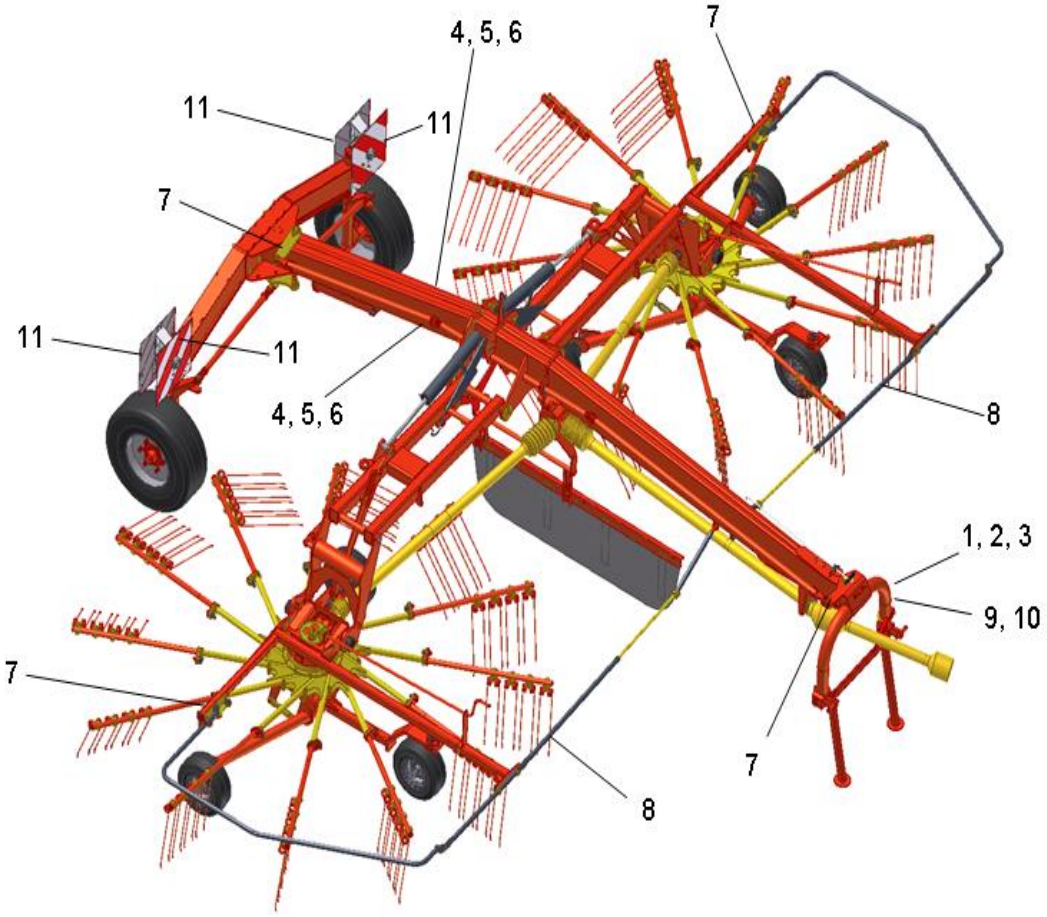

1.

Read the instruction manual and safety instructions carefully before using the machine, and observe the instructions!

2.

Stop the PTO and the engine and remove the ignition key before carrying out maintenance, repair and service!

3.

Wait until all machine parts have come to a complete stop before touching them!

4.

Keep a safe distance from the rotating parts of the machine!

5.

Never stand in the swivel and folding area of the rotors!

6.

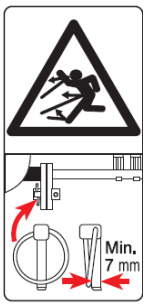

Check the safety pins for wear!
If the thickness is less than 7 mm they must be replaced immediately!

7.

Risk of injury. Never put your hand or arm into the machine when parts are moving.

8.

Be aware of the rake tines of the rotor in transport position, risk of personal injury.

9.

After the first 5 hours of operation all bolt joints must be re-tightened.

10.

The hydraulic pressure should be maximum 210 bar.

11.

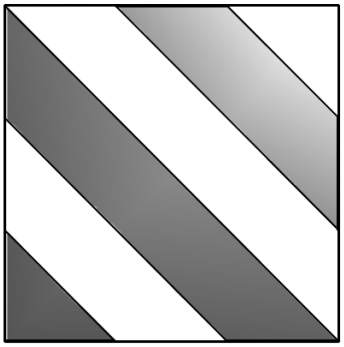

Warning sign, reflecting

2.4 Placement of normal reference signs on the machine

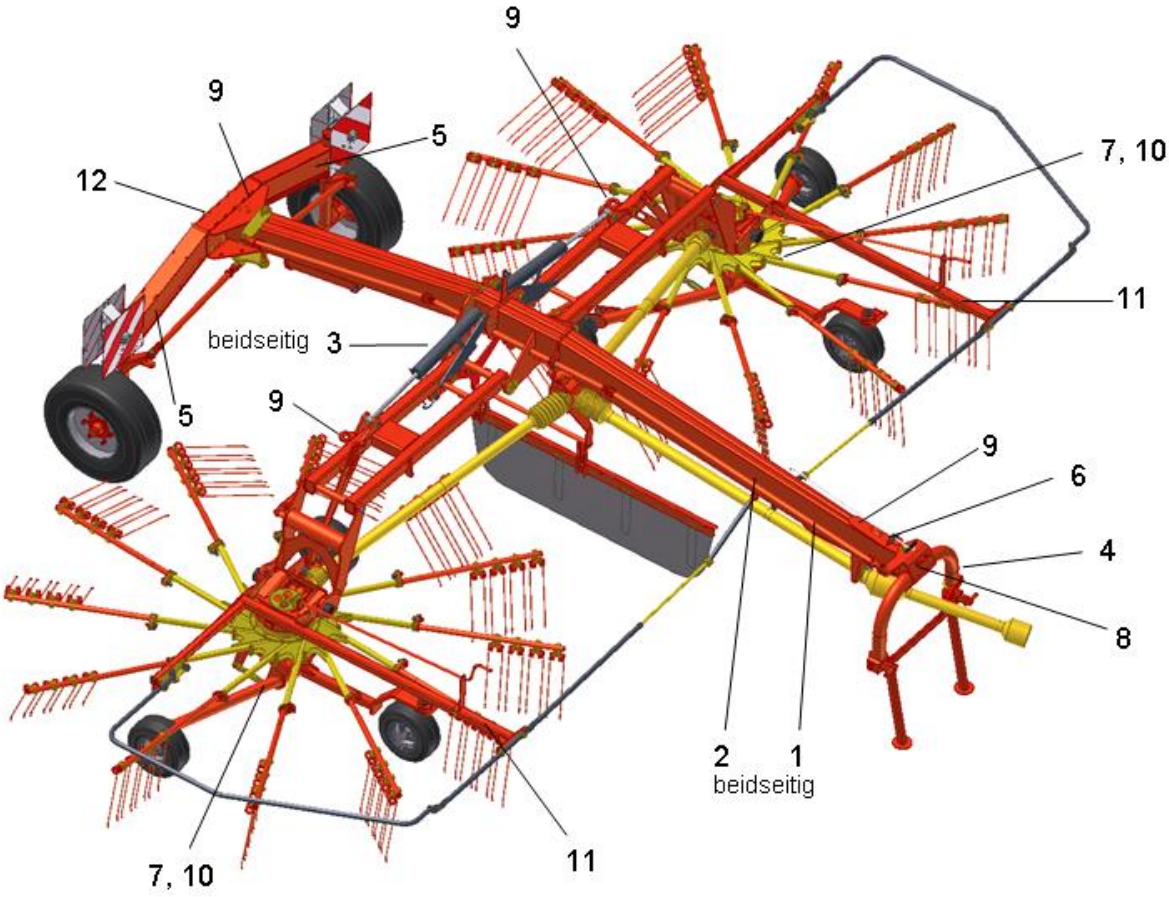

1. LOGO

2.

3.

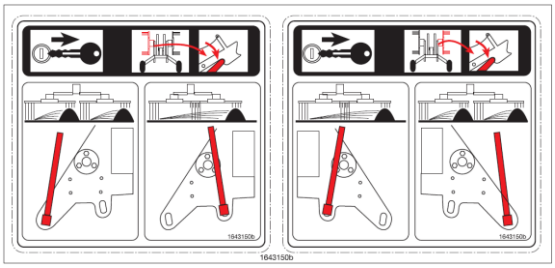

Adjustment of working width

4. **Adjustment of lifting height**

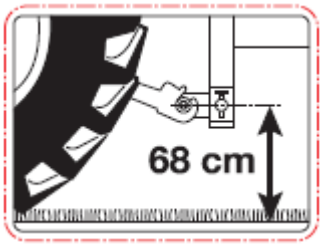

5. **Decal tyre pressure**

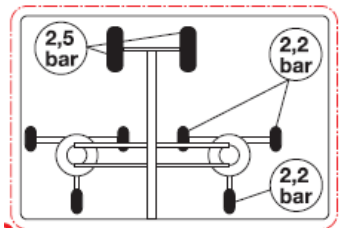

6. **Decal turning angle**

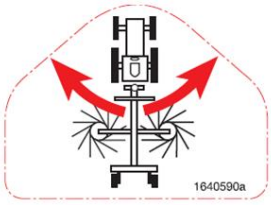

7. **Decal adjustment of cam track**

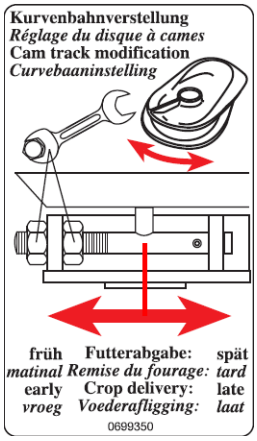

8. **Adjustment of number of revolutions**

9. **Reference lifting eye**

10. **Reference lubrication of cam track**

11. **Decal adjustment of working height**

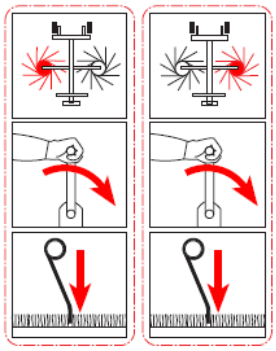

12. **40km/h sign**

3. MOUNTING OF THE MACHINE AFTER DELIVERY

- **Mounting of the rotary rake must only be carried out by experts.**
- **The necessary tools and adjustment tools must be at disposal.**
- **After mounting a complete functional test of the machine must be carried out.**
- **After 50 hours of operation all screw joints must be re-tightened!**

For dispatch by lorry the rotary rakes are disassembled in parts - after the functional test at the factory. After delivery the machine must be assembled. The instructions in this chapter **must be observed!**

The following parts are dismounted before transport:

- Both rotors including the chassis as a unit
- Safety frame complete
- All tine arms
- Warning panels are folded for transport
- Swath guard with both holders
- Wheels for transport chassis

Parts that are needed for mounting are supplied in a bag or on extra pallets.

3.1 Mounting of wheels

- **Mounting of wheels requires correct mounting tools and must be performed by persons with sufficient knowledge.**
- **When working with the wheels the rake must be secured so that it cannot move!**

When the rake has been unloaded the transport wheels of steel must be replaced by the road tyre equipment.

The wheels can be mounted on wide or narrow track depending on the direction in which the crank of the rim is pointing. In both cases the outer width of the rake stays under 3 m.
When working on hilly ground we recommend the wide track as the stability of the machine is thereby increased.

The torque measurement for wheel nuts **(300 Nm)** must be observed. After 5 hours of operation the wheel nuts must be checked and re-tightened if necessary.

3.2 Turning of steering knuckles / mounting of steering

For transport by lorry the steering knuckles have been turned inwards and fixed in this position with a transport safety device. The steering rods have been loosened from the steering knuckles. Thereby the steering is inactivated.

The rake must <u>not</u> be used or transported on public road in this position since there is a risk of overturning!

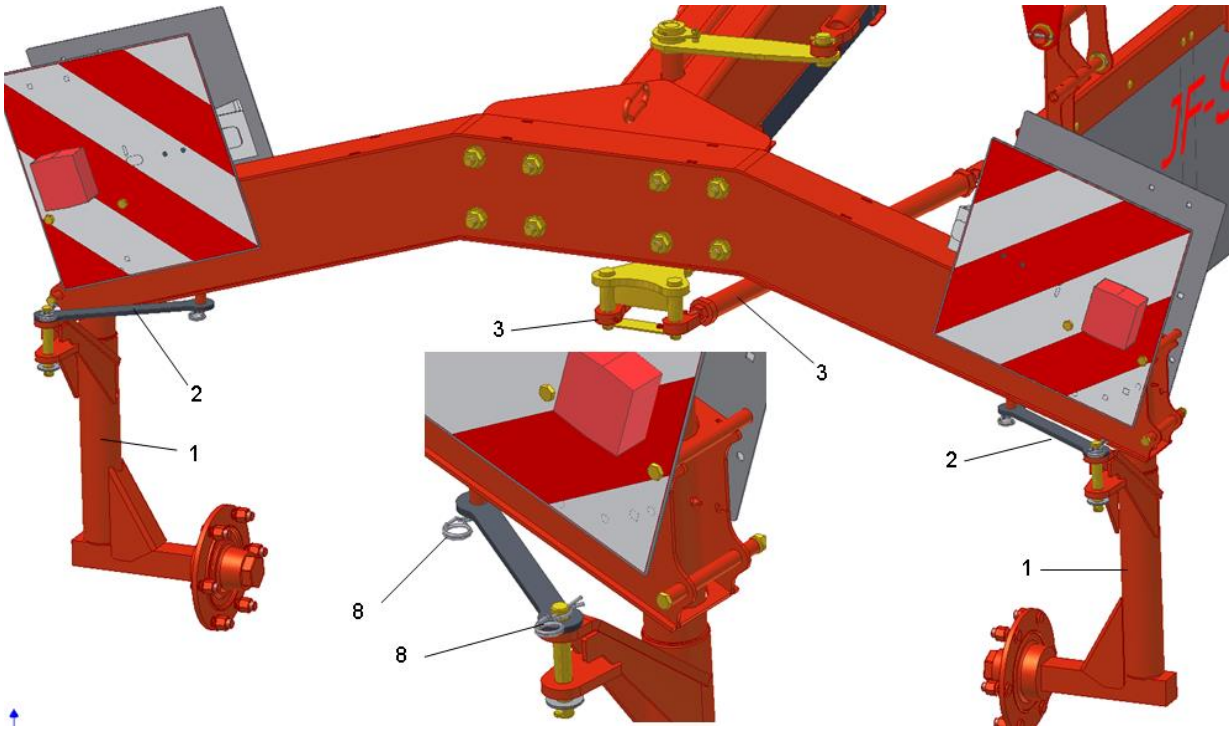

Procedure:

- Transport safety device (2) is removed.
- Steering knuckle (1) is turned 180° outwards.
- Steering rods (3) are fastened to the steering knuckles with bolts (4). For this the following parts are needed in each side:

2 x tightening pin	8x36	(6)
2 x tightening pin	5x36	(7)
2 x washer	21x3	(5)
1 x bolt	20x134	(4)

Bolts and some of the tightening pins are used for the transport lock and are already mounted on the machine, the remaining parts can be found in the supplied screw bag.

The R-pins (8) must no longer be used!

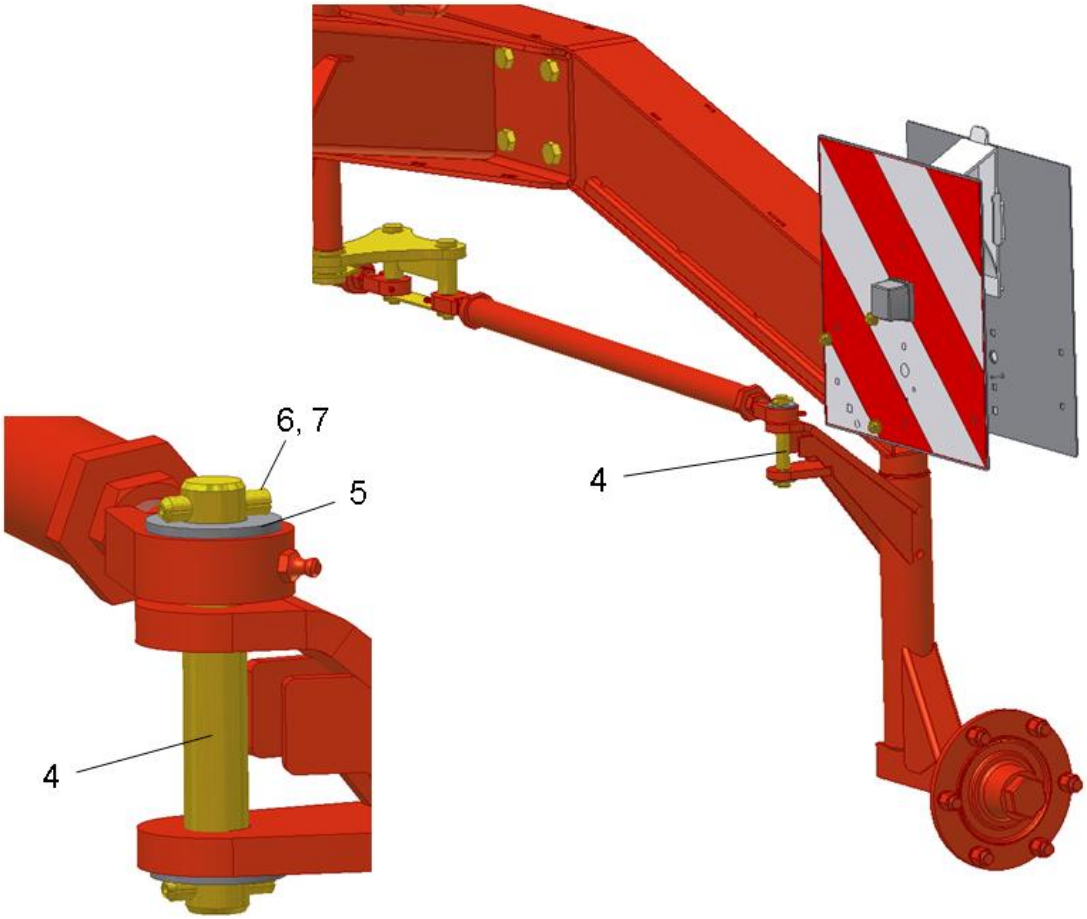

3.3 Mounting of warning panels

The front and rear warning panels are folded in and fastened for transport by lorry (see picture on previous page). The upper screws are loosened and placed so that they fit into the holes and are then tightened again (see above figure).

3.4 Mounting of swath guard

The swath guard is dismounted as a unit together with holders (1,2) and control rod (3) and is supplied on a pallet.

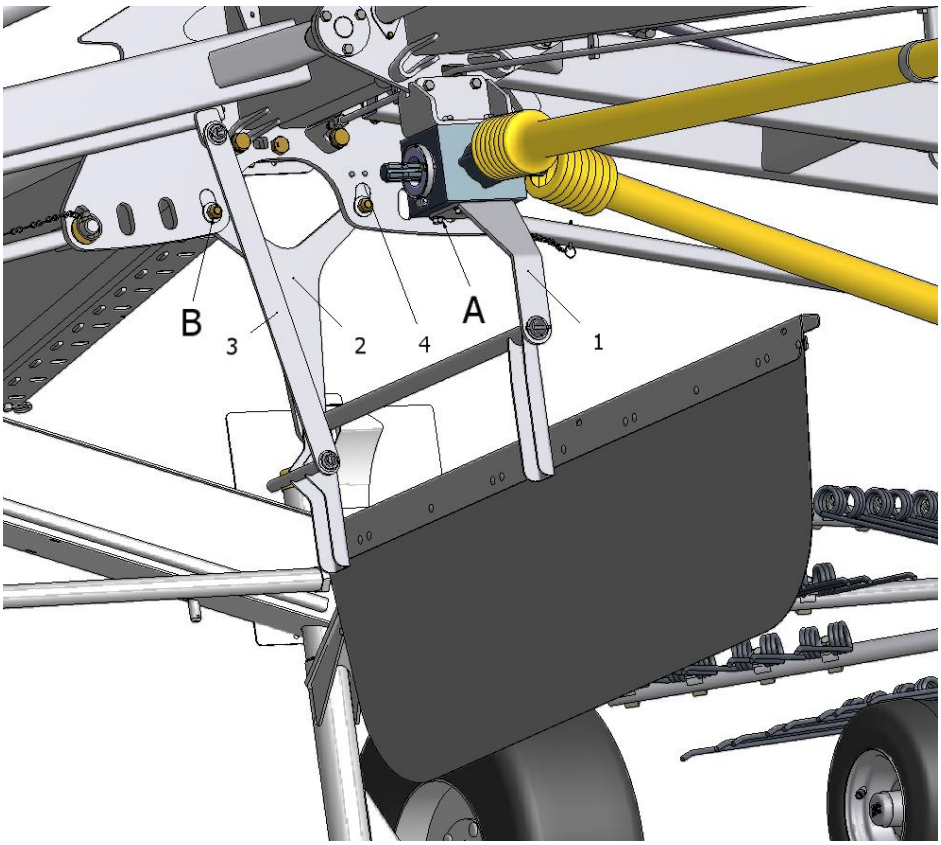

Procedure:

- Holder (1) is screwed on under the gear.
  4 x screw (Position A)
  4 x washer
  The parts can be found in the screw bag.

- Holder (2) is screwed onto the flange plate. The spacers (4) are placed in the innermost oblong holes for the spindles.
  4 x washer
  2 x screw (Position B)
  2 x nut
  The parts are fastened to the holder.

- The control rod (3) is placed at the boom.
  1 x tightening pin
  1 x washer
  The parts can be found in the screw bag.

3.5 Mounting of rotors

R+760:

For the transport by lorry the rotors are separated from the boom (6) at the cardinal fishplates (1). The steering fishplates (2, 3) are also separated from the rotor and remain at the boom.
The steering fishplate 2 (uppermost with cam) must be mounted to the pin on the boom which is further out than the one for steering fishplate 3.

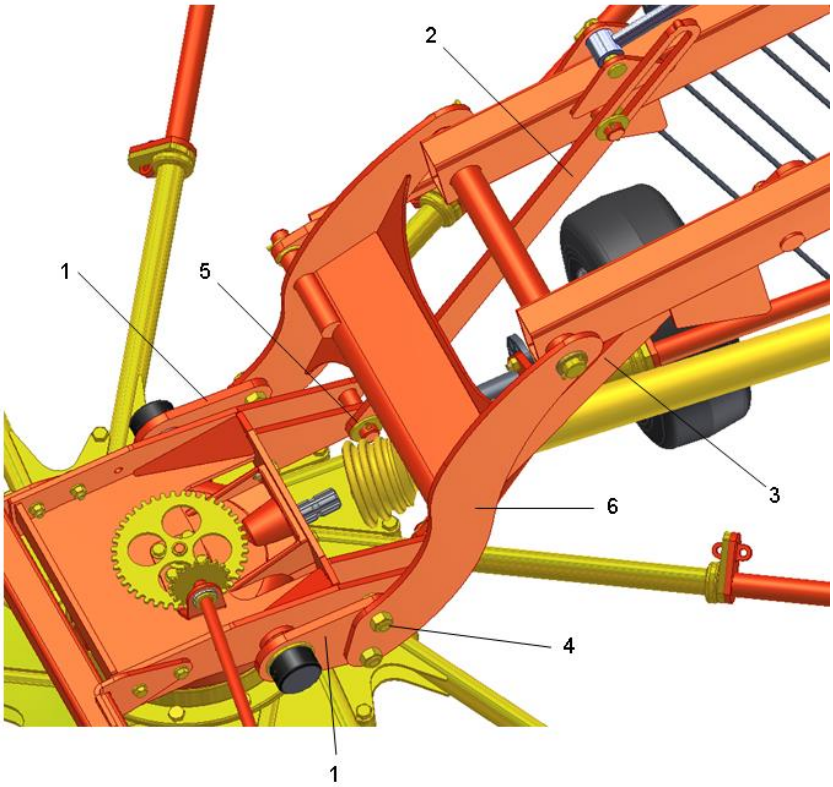

Procedure:

- The cardinal fishplates (1) are mounted on the boom (6). Both cardinal fishplates are placed on the **inside** of the boom. The fishplate with the shortest slot is mounted at the front in the direction of travel.
  Important: The bolt heads (4) must point inwards.

  Parts per rotor:

4x screw	M20x45	(Position 4)
4x nut	M20 self-locking	

- The steering fishplates (2, 3) are mounted on the rotor.

  Parts per steering fishplate:

1x tightening pin	8x50	(Position 5)
1x tightening pin	5x50	
2x washer	31x4	

R+820

For the transport by lorry the rotors are separated from the boom (6) at the cardinal fishplates (1). The steering fishplates (2, 3) are also separated from the rotor and remain at the boom.
<u>The steering fishplate 2 (uppermost with cam) must be mounted to the pin on the boom which is further out than the one for steering fishplate 3.</u>

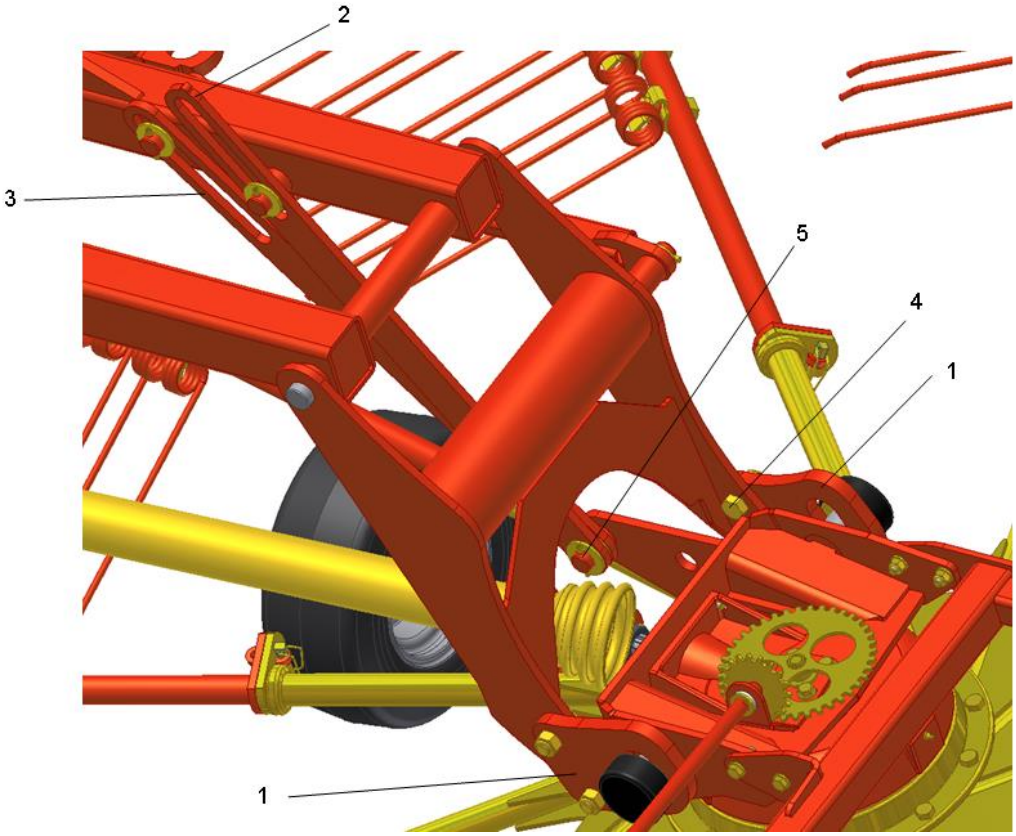

Procedure:

- The cardinal fishplates (1) are mounted on the boom. Both fishplates must be mounted on the outside of the boom! The fishplate with the shortest slot is mounted at the front in the direction of travel.
  Important: The bolt heads must point inwards!

  Parts per rotor:

4x screw	M20x45	(Position 4)
4x nut	M20 self-locking	

- The steering fishplates (2,3) are mounted on the rotor.

  Parts for both steering fishplates:

1 x tightening pin	8x50	(Position 5)
1 x tightening pin	5x50	
2 x washer	31x4	

3.6 Mounting of PTO drive shafts

After mounting of the rotors, the PTO shafts must be connected. These are equipped with a protective cover in the one side. The PTO shafts from gearbox to rotor are pushed in and fastened to the gearbox with clamps.
At the PTO shaft from tractor to machine the protective cover is fastened on the machine side with clamps.

The lock-pins of the PTO yokes must be safely locked at the output of the gearbox and the input of the rotor!

3.7 Adjustment of PTO drive shaft

It may be necessary to shorten the PTO shaft from tractor to machine in order to prevent that it bottoms in the shortest position. On tractors with a short distance from PTO to link arm connection, the PTO shaft may be too long.

<u>Important:</u> The profile tubes must have minimum 200 mm overlap! In the shortest position there must be a distance of minimum 40 mm from profile tube to universal joint!

The adjustment of the PTO drive shaft takes place as follows:

- The rake and the tractor are placed in the position in which the PTO shaft has the shortest length.
- The two PTO shaft half parts are separated.
- The one half part is pushed onto the tractor PTO, the other half part onto the drive shaft of the rake.
- See the instruction manual for the PTO drive shaft for further instructions (enclosed).

If the rake is going to be connected to different tractors, it is important to make sure that the 200 mm overlap and the distance of 40 mm are observed. For tractors with very different distances between PTO and link arm connection it is recommendable to have different PTO shafts in stock.

After the adjustment the swivel area and clearance of the PTO shaft must be checked. The PTO shaft should not in any position get in contact with machine parts.

3.8 Mounting of safety frames

The safety frames (3) are dismounted from the rotor head as complete unit and are supplied on a pallet.
These are fastened to the rotor head with 4 screws (4) each.
The telescopic safety frames (1, 2) are folded up and fastened to the frame. These must be folded down and fastened in position (5) with the safety frame unit (3) as shown on the enlarged drawing. Thereby the safety frame (2) should be easy to swivel between the washers in position (5).

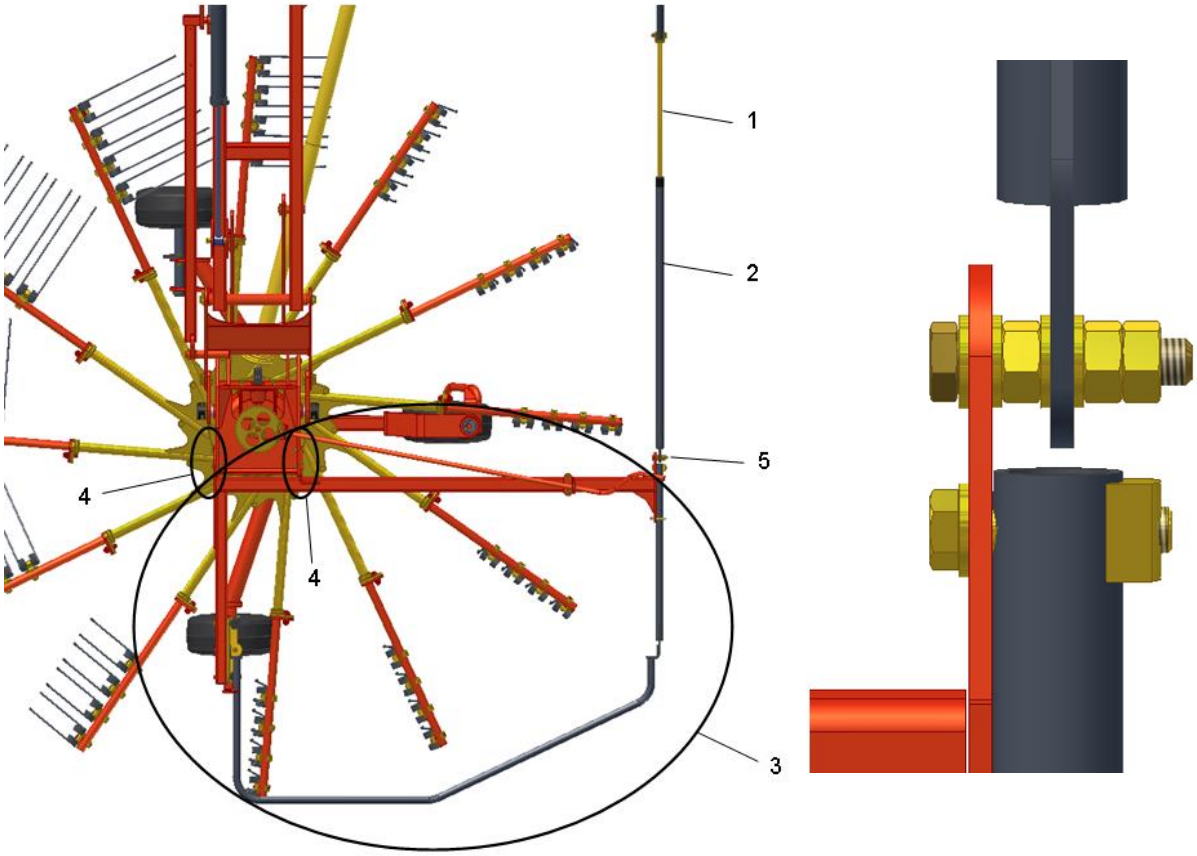

During mounting check that the foldable part of the safety frame is correctly placed. It must be possible to fold up the safety frames.

- Parts per rotor:

4 x screw	M12x40	(Position 4)
4 x nut	M12 self-locking	
8 x washer	13x2,5	
1 x screw	M12x60	(Position 5)
4 x washer	13x2,5	
3 x nut	M12	

3.9 Mounting of hydraulic lock (optional equipment)

The optional equipment “hydraulic lock” is not mounted from the factory. It must be mounted by the dealer or the user after delivery of a new machine or be retro-fitted.

Procedure:

1. The hydraulic hose from the T-piece under the frame to the left lifting cylinder is dismounted. For this purpose the strip at the lifting cylinder must be separated in two parts.
2. The valve (1) is fastened to the frame as shown on the figure. For this you need two screws (2) M6x65, washers and nuts M6. The screws are supplied together with the equipment, the oblong holes are in the frame as standard.
3. Screw-joints are screwed into the valve.
4. Hose 750 mm (3) is mounted on the T-piece under frame and valve.
5. Hose 1100 mm (4) is placed between valve and connection lifting cylinder.
6. Hose 4 is fastened to the lifting cylinder with strip. The strip must be placed 120 mm away from the piston head in order to obtain a safe hose placement.
7. Cable for control box is placed under the frame along the hydraulic hose. Plug is placed in the valve and fastened.
8. Holder for control box is fastened at an easily accessible place in the tractor and on the rake.

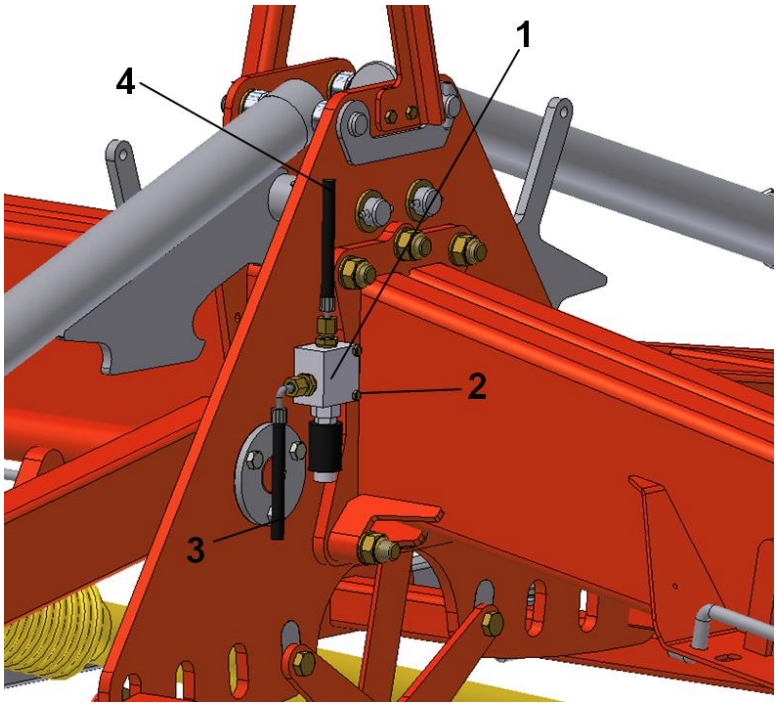

After mounting, the hose placement must be checked by carefully raising and lowering. The hose from the lifting cylinder to the valve should not get caught or squeezed anywhere. It must be as shown on the picture below.

3.10 Functional test

After the preparation of the rotary rake, a functional test must be carried out. Folding in and out of the rotors as well as test of the transmission must work correctly before working with the machine.

After 50 hours of operation all screws must be re-tightened!

3.11 Mounting of extra wheels on rotor chassis (optional equipment)

In soft or wet fields it may be necessary to relieve the wheels on the rotor chassis. This can be done with the wheels (1) which can be supplied as optional equipment. These are spring-loaded and articulated.

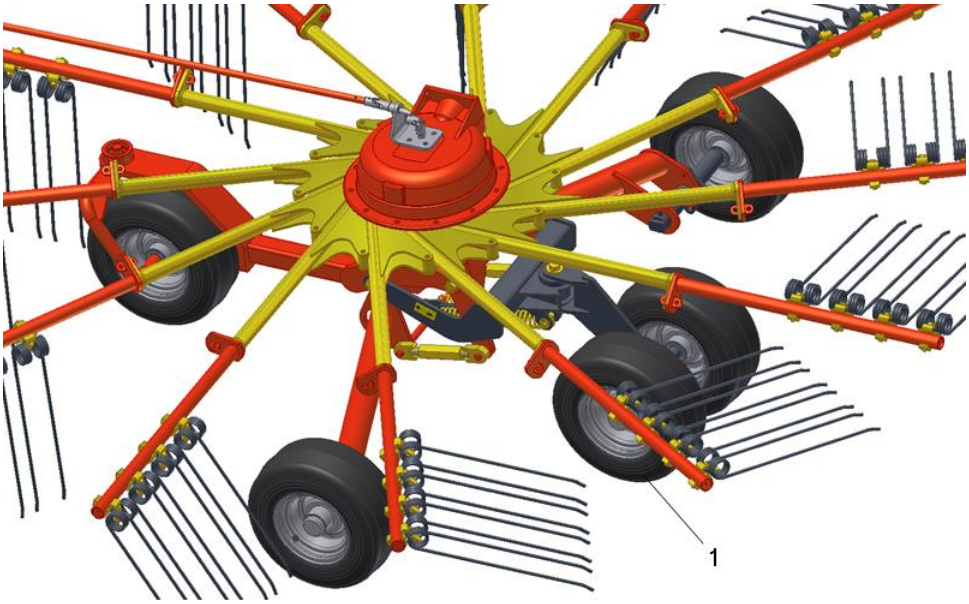

- The holder (1) is mounted on the extended bolt (2) which is replaced by the existing.
- The bushings (3) are placed in the left and right-hand side with the tightening pins.
- The two rods (4) are mounted as shown.
- Finally the springs (5) are placed and tightened.

The decals “Risk of injury” (6) refer to possible danger in connection with mounting, adjustment and maintenance.

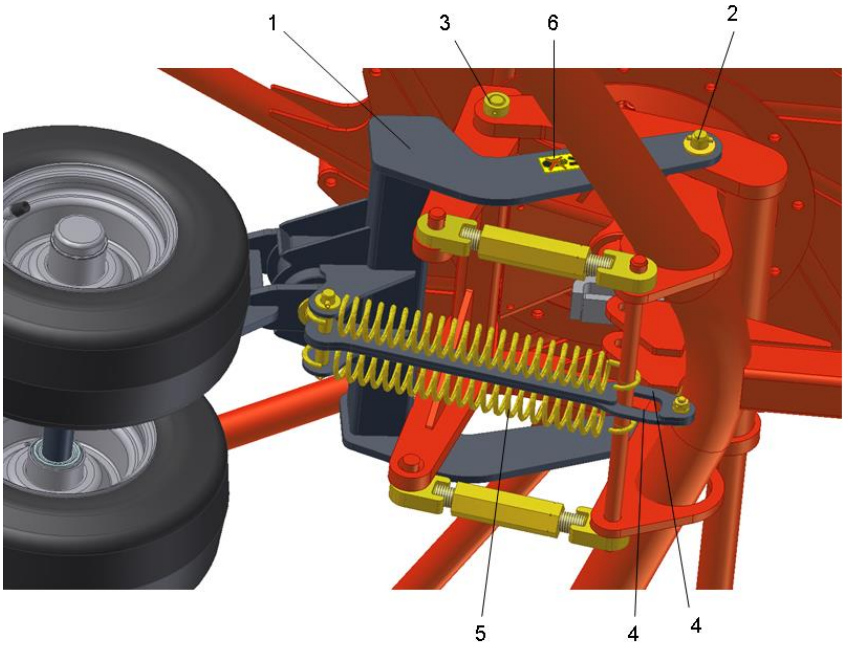

4. MOUNTING OF THE RAKE / PREPARATION

- **Always disengage the PTO drive shaft before maintaining, repairing and mounting. Stop the engine and remove the ignition key. Secure the tractor and the rotary rake so that they cannot move!**
- **The maximum number of revolutions is 540 rpm.**
- **Operating parts such as cords, hydraulic hoses and cables must be placed so that unintended operation and contact with the tractor wheels are impossible. Danger!**
- **During raising and lowering never stand between the tractor and the rake or under the raised rotor arms. Risk of personal injury!**
- **Before starting the PTO check that there are no persons in the danger zone of the rotary rake. Danger!**
- **Before work and transport on public road always make sure that all guards are mounted correctly! Check that the lighting equipment is working.**
- **The operator should never leave the tractor during working! Make sure that there are no persons in the danger zone!**

4.1 Special instructions

In the area of the 3-point suspension there is a risk of personal injury since there are places where you can get jammed or cut!

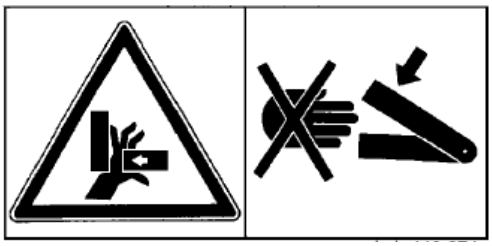

Be particularly careful during connection and disconnection of machines!
Never stand between the tractor and the rake during connection to the link arms. The operator should not step into the danger zone until the electric cables, the hydraulic hoses and the PTO are to be connected.

The operating elements of the tractor must be secured against unintended use before connection and disconnection.

4.2 Preparation of tractor

4.2.1 3-point suspension on the tractor

The rakes R+760 and R+820 are equipped with hitch pins cat. 2. Depending on the equipment of the tractor, balls can be installed.

The sideways movement of the link arms on the tractor must be minimised in order to avoid oscillation of the machine during work and transport. The link arms must be secured with limiting chains or other locking device.
Adjust the link arms of the tractor so that they are at the same height above the ground. For R+760 and R+820 this height is **68 cm.** There is also a sign on the suspension regarding this.

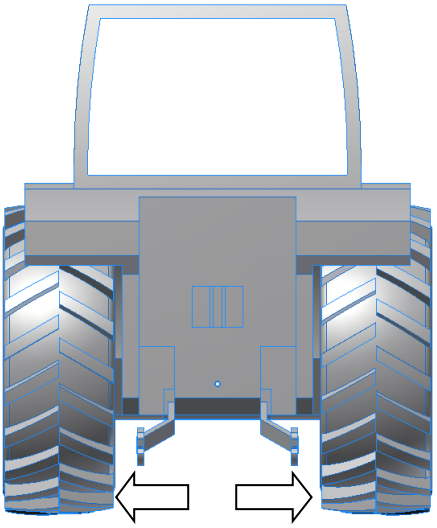

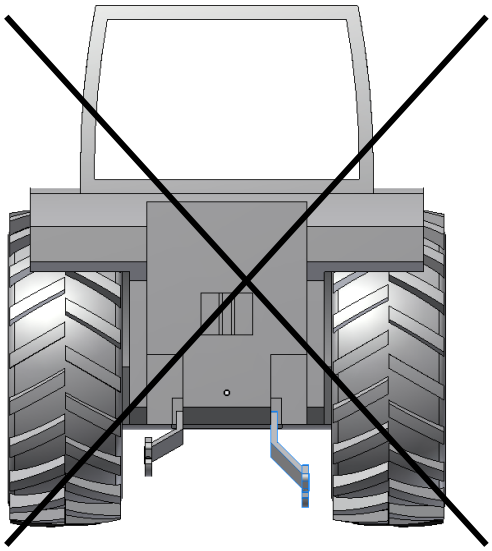

4.2.2 Placement of cord

It should be possible to operate the cord for the locking pawl from the tractor seat. It must be ensured that it does not get jammed and is not placed on sharp edges. The cord must be relieved when the pawls are lowered.

4.2.3 Hydraulic system (throttling)

The lifting cylinders of the rotary rake are equipped with throttle pieces. No adjustments should be made on the tractor.

4.2.4 Electric system

The lighting system is equipped with a 7-pole plug for the trailer socket.
For the hydraulic lock (optional equipment) there must also be a 12V socket.

4.3 Connection of the rotary rake to the tractor

The instructions are based on a fully mounted rotary rake in locked transport position.

4.3.1 Connection to the link arms of the tractor

- **Never stand between the tractor and the rake during connection to the tractor.**
- **Make sure that there are no persons in the swivel area of the tine arms!**

The pins on the suspension of the rake are connected to the link arms of the tractor and secured.

The power transmission (PTO shaft) as well as the electric and hydraulic connections must be established before the support is folded up since the operator has to step into the danger zone.

Raise the rake a bit so that the support is lifted off the ground.

Release the support by pulling the rod (1).

Move the support 90° to the rear and lock it again. When the support is correctly locked, the tightening pin (2) of the rod is in full contact with the side plate of the support.

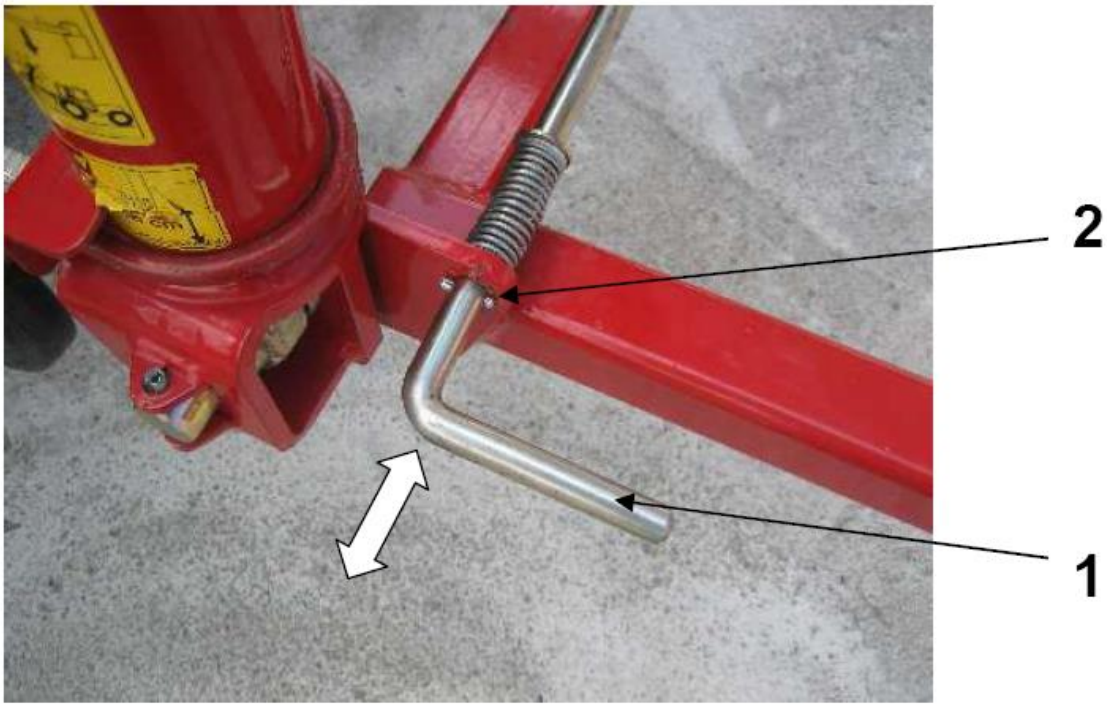

4.3.2 Hydraulic connection

For the conversion from transport to working position of the rotary rakes R+760 and R+820 a single-acting outlet is needed. Make sure that there is a floating position so that the rake can follow the ground during operation.

The stop valve on the machine side (ball valve) should be opened after the connection to the tractor hydraulics so that the coupling is not under pressure. When the machine is parked the pressure may adjust, for instance if the outdoor temperature changes.

4.3.3 Connection of lighting equipment

The rakes R+760 and R+820 are equipped with lighting according to current rules. The lighting system is equipped with a 7-pole plug at the lighting cable. This plug is connected to the lighting socket on the tractor.

After the connection the function of the lighting system must be checked! Dirt and moisture may result in contact problems or even short circuit. Therefore the plug connection must be kept clean and dry.

4.3.4 Connection of PTO shaft

The description implies that the length of the PTO shaft is adjusted to the tractor according to chapter 3.7.
If the machine is used with different tractors it must be checked that the PTO shaft has the correct length.
On the tractor and machine side there must be an intact guard.
Only use the supplied PTO shaft or a PTO shaft that is approved by the manufacturer!

- The PTO shaft is taken from the holder.
- The PTO shaft is pushed onto the tractor PTO until the lock-pin is engaged.
- The guard of the PTO shaft must be fastened with safety chains on the tractor in order to avoid that it rotates.

4.3.5 Connection of hydraulic lock (optional equipment)

For the hydraulic lock there must be a 1-pole 12V socket on the tractor. The plug of the operating unit is connected on the tractor.

Caution: Check the position of the switch before you start working. The valve for the hydraulic lock is open when there is no current on the valve!

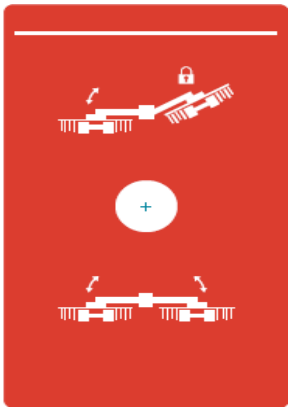

The operating unit is installed in the tractor cabin. The hydraulic lock is operated from the tractor seat.

The switch of the operating unit has the following functions:

down: The rotor is free, valve open
Normal operation

up: The rotor is hydraulically locked, valve closed
"**Hydraulic lock**"

When the hydraulic lock is activated no persons are allowed to stand under the rotor! The hydraulic lock should <u>not</u> be used during maintenance and repair!

4.4 Transport on public road

- **Make sure that the locking pawls have been locked correctly in transport position.**
- **The ball valve of the hydraulic hose must be closed.**
- **Transport height maximum 4 m. See chapter 1.5.4 Technical data.**
- **When driving on public road the current traffic rules with regard to lighting must be observed!**
- **The maximum speed of 40 km/h should not be exceeded.**
- **Always adjust the driving speed to the conditions of the road.**

5. HANDLING OF THE RAKE DURING WORKING

The following description implies that the rake is completely mounted according to chapter 3 and connected to the tractor according to chapter 4. The machine is in transport position.

5.1 Conversion of the rake from transport to working position

5.1.1 Release of rotor arms and lowering of rotor

- **Check that there are no persons in the swivel area of the machine before the rotor arms are released and folded down.**
- **Make sure that no persons stand between the tractor and the rake.**

- The stop cock for the hydraulic hose on the machine side must be opened.
- The rotor arms must be raised a bit so that the locking pawls are released. This is done by activating the control valve in position “raise”.
- The locking pawls are raised by pulling the cord so that the rotor arms can be lowered.
- The rotor arms are lowered until both rotors rest on the ground.
- The locking pawls are lowered.

5.1.2 Mounting of tine arms

- The tine arms, which are dismounted for transport, can be found at the rear frame part in the left side of the machine in the direction of travel.
- The safety hoop must be released and folded to side to be able to remove the tine arms. Remember to lock the hoop again when the tine arms have been removed.
- The tine arms are pushed onto the bearing units so that the fishplate on the tine arm is led through the slot in the bearing unit.
- The tine arms must be secured with split pin. **Before starting the rake it must be checked that all split pins are in the correct position.**
- All tine arms must be mounted before starting the machine in order not to create an unbalance which may damage the machine.

5.1.3 Safety frame is placed in working position

- The safety frame (1) is swivelled 180° outwards,
- until the locking mechanism (2) is safely engaged above the safety frame (1).

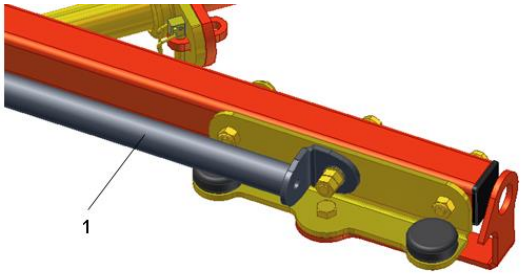

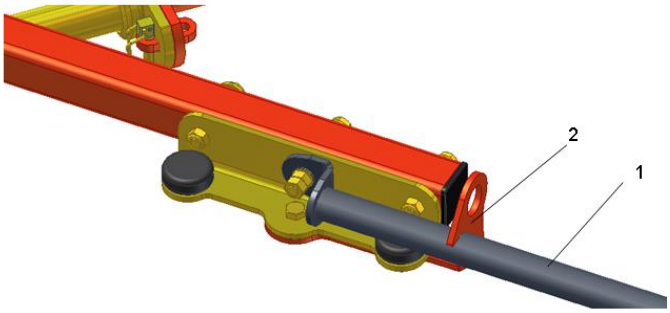

5.2 Starting the rotor

The tractor PTO is connected at idle speed and the number of revolutions is increased to 380-450 rpm. The machine has the best working quality if the number of rpm is in this area.

The rake is now ready for operation!

5.3 Position when driving on headlands

The rotary rake has a defined position for driving of headlands. In this position the rotors are raised so that the swaths to be crossed are not spread again. The hydraulic outlet on the tractor is activated in direction “raise” until the stop of the rotor arms (1) is in contact with the locking pawls (2) at front. The locking pawls should not be raised!

R+760:

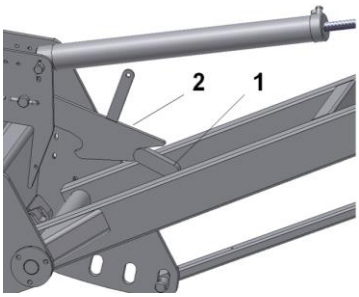

R+820:

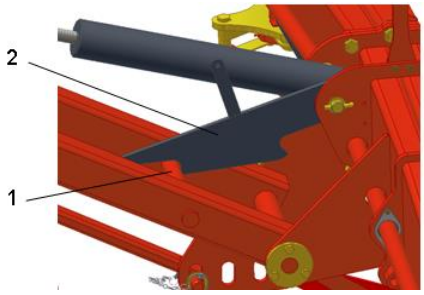

5.4 Conversion of the rake from working to transport position

- **Before folding of the rake check that there are no persons in the swivel area.**
- **Check that there are no obstacles, e.g. trees, masts etc., which may hinder the folding.**

5.4.1 Safety frame is placed in transport position

- With one hand the safety frame (1) is pressed down against the rubber buffer (3) while pulling the locking mechanism (2) with the other hand.
- The safety frame (1) is swivelled 180° inwards until it lies on the other rubber buffer.
  Disc springs in the joints of the safety frame make sure that the safety frame stays in this position during transport.

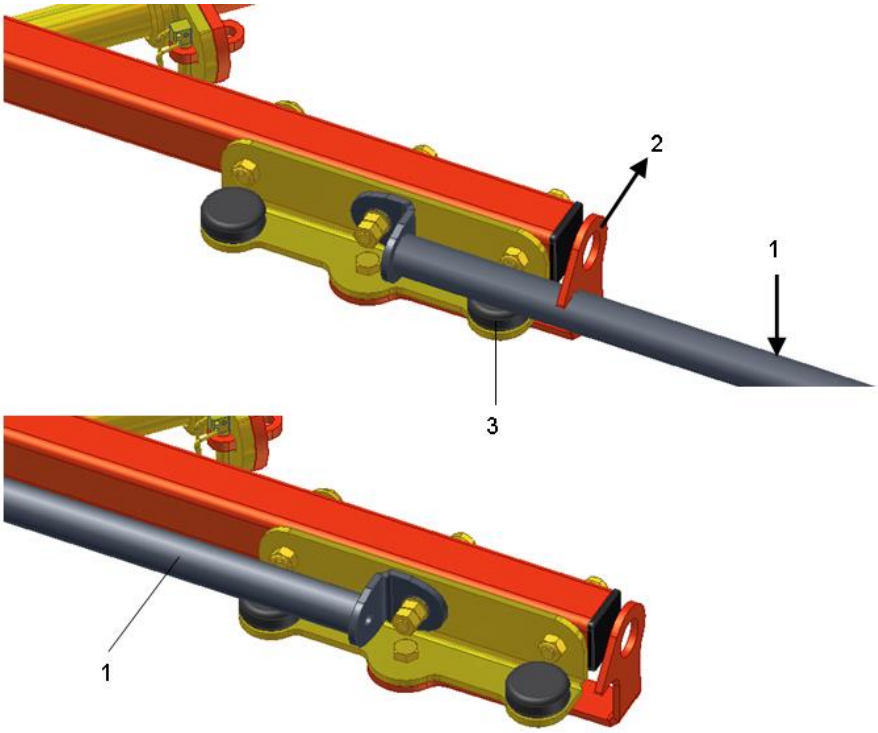

5.4.2 Tine arms are detached and secured for transport

- The split pin is pulled out and placed in the hole on the opposite fishplate side.
- The tine arms are placed on the tine arm holder at the back of the main frame and secured for transport with the safety hoop.

5.4.3 Rotor arms are raised and locked

- The locking pawls are raised by pulling the cords.
- The rotors are folded to transport position.
- The locking pawls are locked by loosening the cord.
- The hydraulic outlet is set to floating position so that the rotor arms go down into the locking pawls.
- The hydraulic outlet of the tractor is set back to neutral position.
- The ball valve is closed at the hydraulic hose.

R+760

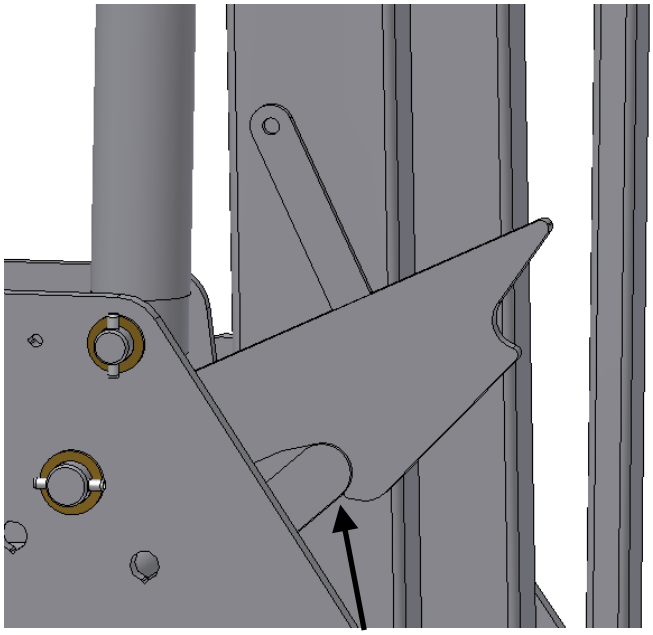

R+820

The rotary rake is now ready for transport!

5.5 Adjustment of working width

The rotary rakes R+760 and R+820 can be set to 3 different working widths. This adjustment can only take place when the machine is in transport position.

- **The stop cock of the hydraulic hose must be closed during adjustment.**
- **The locking pawls must be engaged.**

The adjustment takes place as follows:

- Split pin and disc on the rod (1) are removed.
- The rod (1) is placed in the desired oblong hole.
- Split pin and disc are placed again.

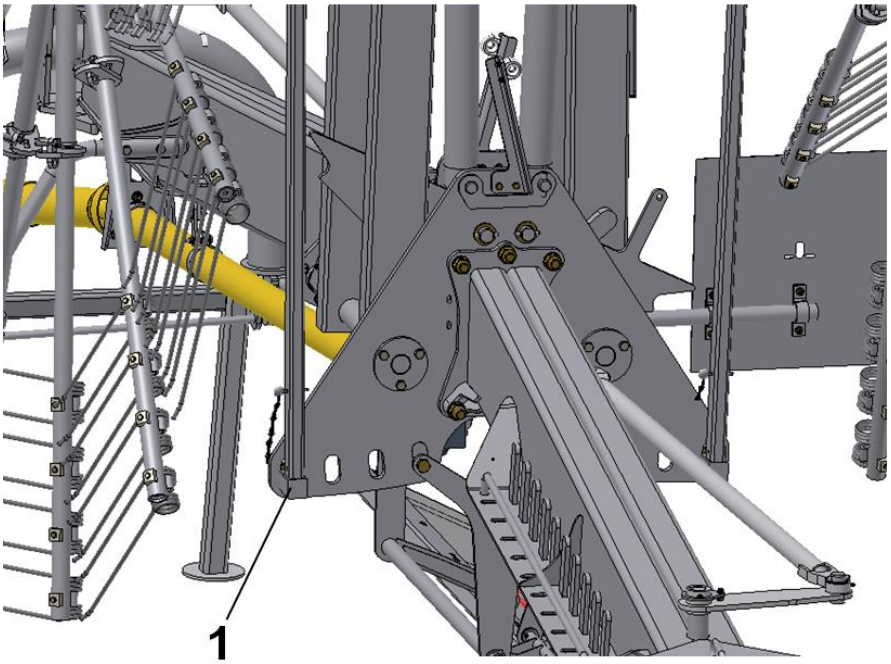

The following working widths can be preset:

	R 760:	**R+820**
Outermost:	7.60 m	8.20 m
Middle:	7.20 m	7.80 m
Innermost:	6.80 m	7.40 m

Asymmetric adjustment of the working widths at the left and right-hand rotor is also allowed!

The transport height is independent of the working width!

5.5.1 **Alfalfa position**

The rotary rakes have a fourth position for adjustment of the working width.
For this purpose the swath guard must be dismounted. The rotors are so close in working position that there is no room for the swath guard.
This position is intended for crops which are intertwined in the stubbles and must be lifted once from the ground in the whole working width. (e.g. alfalfa grass, alfalfa etc.)

Procedure when dismounting the swath guard:

- Swath guard (1), holder at gear (2), holder at frame flange with spacers (3) are dismounted completely.
- Rod (4) at boom is dismounted.

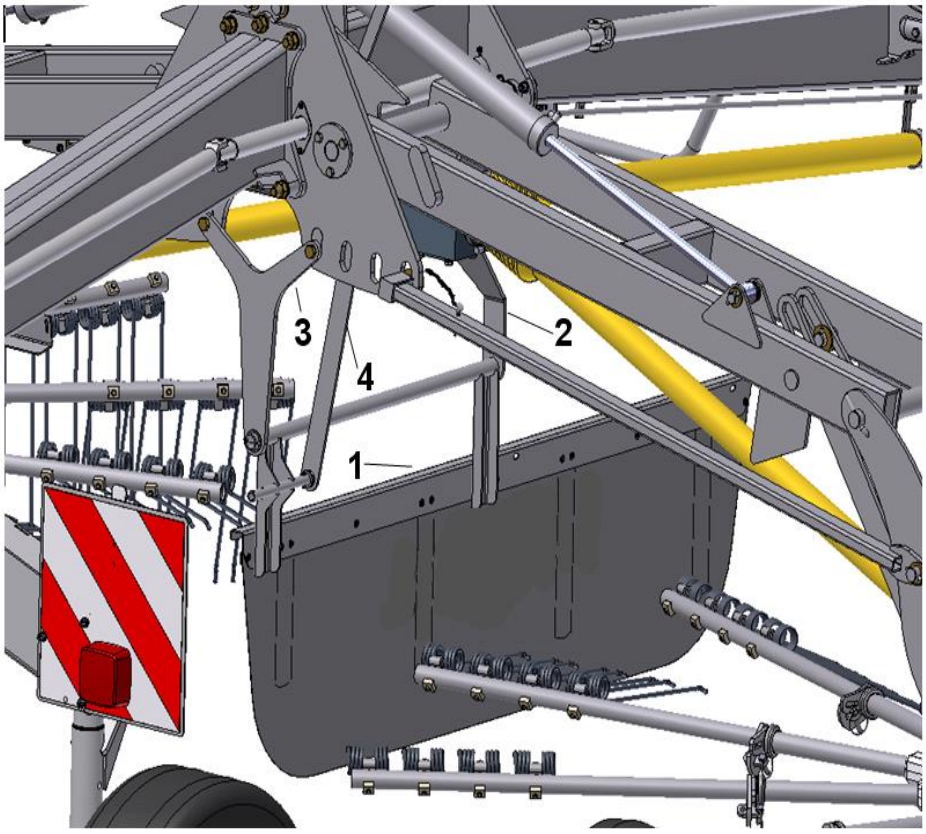

In this position the following working widths can be obtained:

R+760:	6.45 m
R+820:	7.00 m

Depending on the crop it may be an advantage to adjust the crop delivery on the cam track to "later". See chapter 6.3.)

5.6 Further instructions for working and driving with the machine

This machine is equipped with mechanical power steering. This means that the rake approximately follows the track of the tractor. This means that the machine has a very good manoeuvrability.
A stop under the front frame secures the suspension against too sharp turns.
A visual indicator shows the operator how far he can turn. For this purpose there is a special label on the front frame. If the inclined sides of the label and the flange of the suspension form a line (1), the steering is close to the stop.

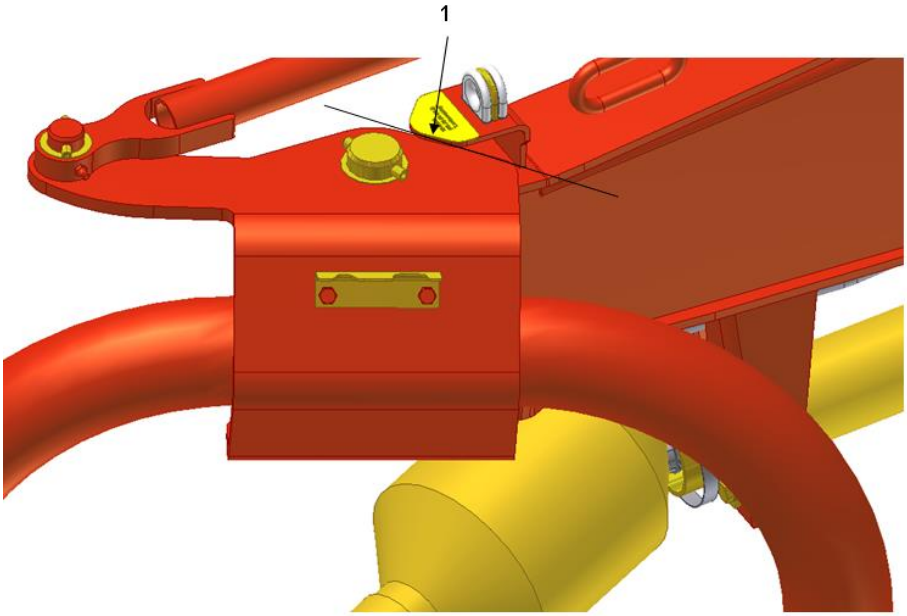

Continued steering against the stop may lead to damage of the suspension, frame and steering rods and should be avoided.

Damage of the suspension, frame and steering rods will influence the road safety of the rake.

5.7 Hydraulic locking of rotor (optional equipment)

For the rotary rakes R+760 and R+820 a hydraulic locking device is available as optional equipment for the left rotor (seen in the direction of travel) (see also chapter 3.9.). This makes it possible to work with only one rotor, for instance along the field boundary. The other rotor remains locked in the headland position. Hereby the hydraulic hose for the lifting cylinder is blocked with a hydraulic magnet valve. The valve is open when there is no current on the valve and does not close until there is a voltage.

For the use of this equipment the tractor must be equipped with a 12V socket. The equipment can also be used through an adaptor for the cigarette lighter.
The valve is controlled through an operation unit which is installed in the tractor cabin.
Both rotors are raised to headland position. In this position the left rotor in the direction of travel is locked. The right-hand rotor can now be lowered to working position.

Never use the hydraulic lock to block the rotor in headland position with the purpose of carrying out maintenance and repair on the machine. If the current supply is unexpectedly cut off, the rotor may suddenly fold down. *Danger!*
Also when the ball valve is closed there may be a balancing between the lifting cylinders and the blocked rotor may fold down when the valve is open.

5.8 Securing of tines in transport position

Tines, which in transport position are in an area of 500 mm – 2,000 mm above the ground and protrude, must with a view to personal safety be equipped with tine protection according to EN ISO 4254.
For this purpose there are 10 synthetic tine guards under the rear frame.

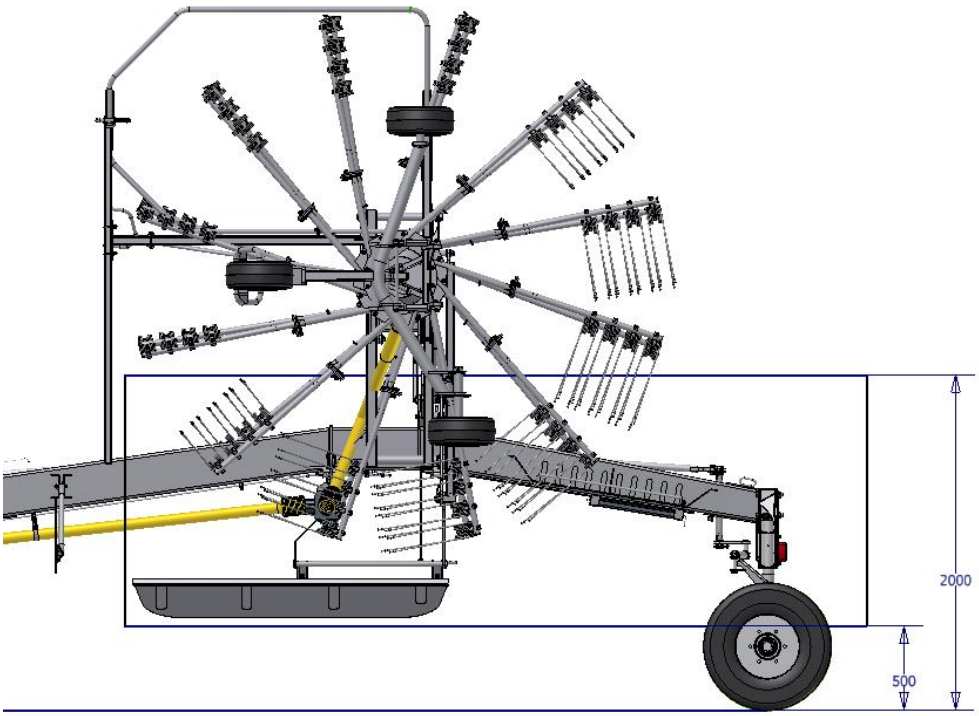

The tine guards <u>must</u> be used during transport of the rake and when parking the rake in transport position.
Otherwise there will be risk of personal injury!

5.8.1 Placement of tine guards

The tine guards (1) are placed on the tines. No further securing is needed.

The tine guards must be placed on the tines in all operating conditions except the working position!

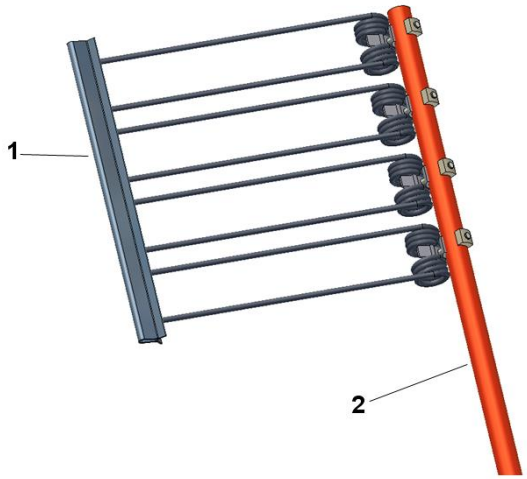

5.8.2 Securing of tine guards during working

When the tine guards are not in use, they are stored under the rear frame. The tine guards (1) are pushed into the holders (3). The locking plate (2) is pushed through the slots in the holders and locked with spring pin (left-hand side on the picture). The picture shows the secured position.

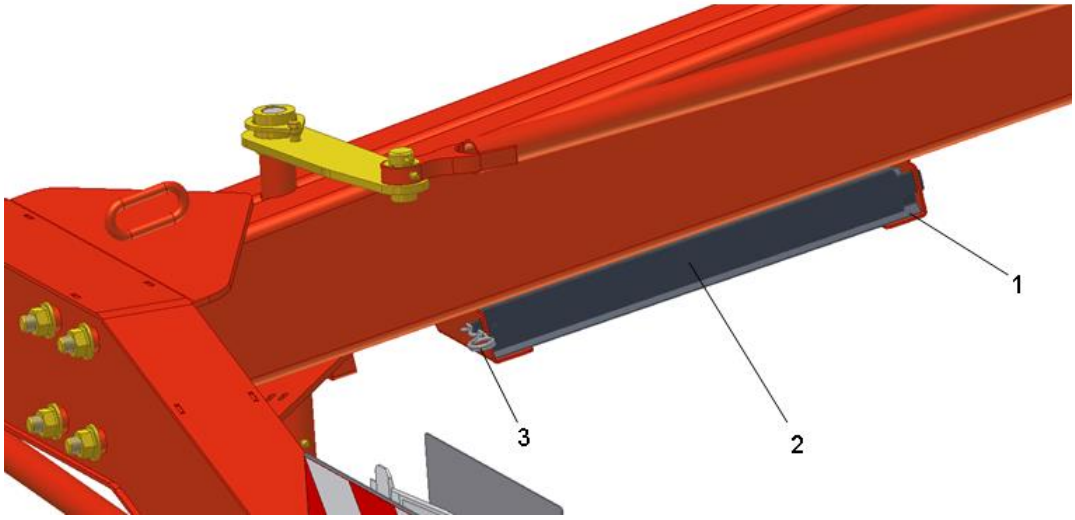

The tine guards are pushed into the holders as shown on the following picture.

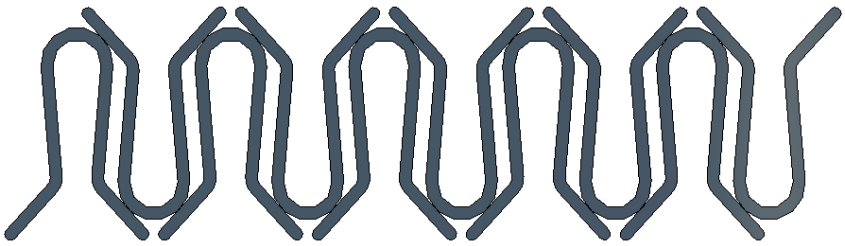

5.9 Disconnection of the machine:

- **The rake should either be lowered to working position or be in transport position with the locking pawls safely engaged.**
- **The hydraulic system should <u>not</u> be under pressure and the ball valve must be closed.**
- **The ground must be sufficiently firm and even.**
- **Before the disconnection the rake must be secured with stop blocks so that it cannot move!**

Procedure:

- Choose a sufficiently firm, dry and even ground.
- The support (1) is released and folded down. The rod is locked again (see chapter 4.3.1).
- The link arms of the tractor are lowered until the support rests safely on the ground.
- The rake is secured with stop blocks so that it cannot move. The stop blocks can be found at the back of the rear warning panel.
- The PTO shaft is disconnected from the tractor and placed in the holder (2).
- The stop valve for the hydraulic hose is closed. The hydraulic hose is disconnected and placed in the holder at the suspension (3). (Make sure that the system is not under pressure while this is done!).
- The lighting cable is disconnected and placed in the holder at the suspension.
- The link arms of the tractor are released from the rake and the machine is disconnected.

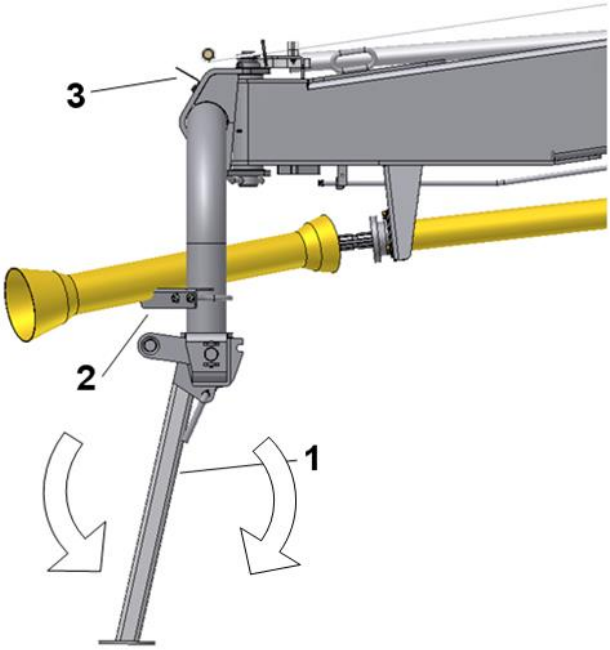

6. BASIC ADJUSTMENT OF THE RAKE

- **Basic adjustment is carried out with stopped rotors!**
- **The tractor engine must be stopped.**
- **Never work under the rotors without sufficient support!**

6.1 Height of the link arms

Adjust the link arms of the tractor to a height of 68 cm above the ground. If this height is not observed, you risk that clean raking cannot be obtained.

6.2 Adjustment of working depth

The working depth is adjusted by means of the spindles which are mounted from the rotor centre to the safety frame.

Standing in front of the rotor against the direction of travel, the adjustment can be made as follows:

Spindle is turned in direction clockwise: The rotor is set higher
Spindle is turned in direction counter-clockwise: The rotor is set lower

The pre-setting should be carried out on even, firm ground as follows:

- The rotor is lowered until the tines touch the ground
- The spindle is turned back 2-3 turns.

The machine must be stopped before the adjustment is made!

It may be necessary to change the adjustment when the machine has been put into operation. The adjustment must be adapted to the conditions, i.e. the type and humidity of the crop, the stubble length and ground conditions.

- If the adjustment is too low, earth may be mixed with the crop. The grass roots may be damaged. Wear of the tines is increased.
- If the adjustment is too high, clean raking cannot be obtained and crop remains on the ground.

6.3 Adjustment of crop delivery time

For adjustment of the crop delivery time the position of the cam track in the rotor can be changed. The adjustment device is placed under the rotor.

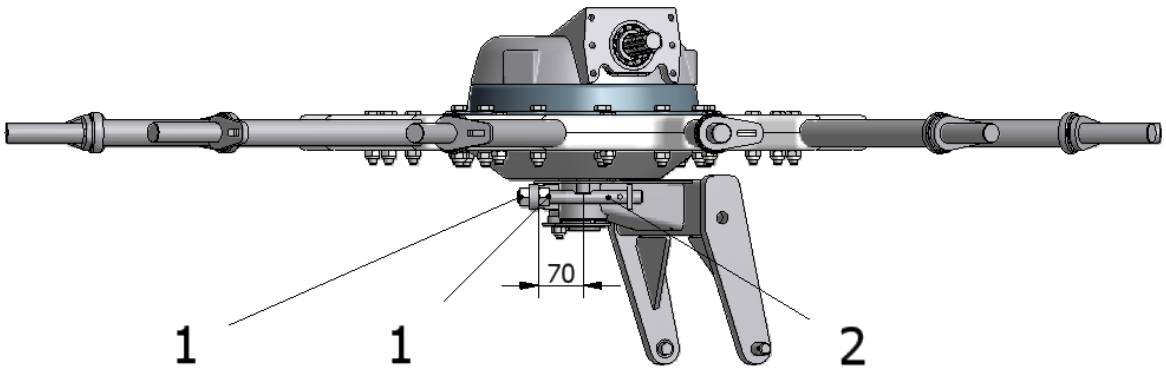

From the factory the adjustment is set to 70 mm. If the crop delivery time should be later or earlier, the adjustment is changed as follows:

- Counter nuts (1) are loosened (wrench size 30)
- Earlier crop delivery – distance 70 is reduced
- Later crop delivery – distance 70 is increased
- Counter nuts are tightened again

The crop delivery time is important for the swath formation of the rotor. In different crop conditions it may be necessary to change the moment at which the tines are lowered and lifted.

6.4 Adjustment of the working width

Adjustment of the working width takes place as described in chapter 5.5.

6.5 Adjustment of the rotor inclination

For adjustment of the rotor inclination in the direction of travel there are two spindles between axle support and chassis.
From the factory these spindles have been adjusted to a length of 245 mm. In this position the rotor is approx. 3 cm lower at the front than at the rear. This adjustment is necessary in order to obtain a good result.
If crop remains at the middle of the rotor, the rotor is too high at the front. In that case it is necessary to readjust at the spindles.

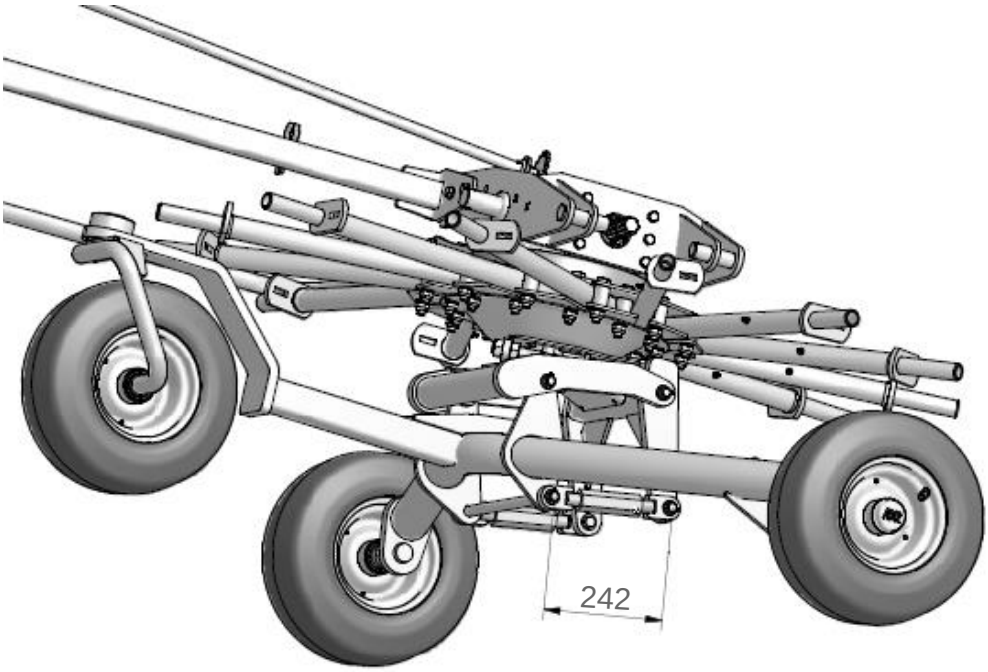

6.6 Adjustment of the rotor inclination sideways

For individual adjustment to different material the innermost support wheel on the rotor chassis is placed on an eccentric axle journal (1).

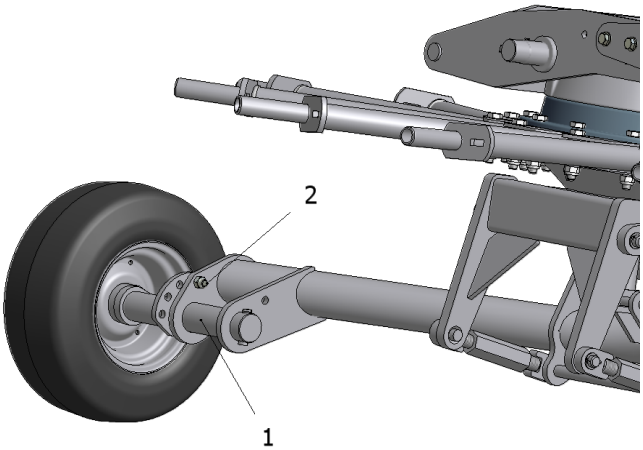

To make the adjustment the fixing bolt (2) is removed from the middle position, a wrench (size 30) is applied and the axle journal is turned.
There are 6 adjustment possibilities on the axle journal.
After the adjustment the fixing bolt is placed again and tightened.

6.7 Driving speed and number of revolutions

The driving speed and the number of revolutions during raking depend on the following:

- The type of crop
- The amount of crop
- The ground conditions
- The humidity of the crop

As a rule-of-thumb the following applies:

Driving speed: 8-12 km/h

Number of revolution, PTO: 380-450 rpm

Always adjust the number of revolutions and the driving speed to the working conditions.

<u>Adjustment instructions:</u> If the tines draw material from the swath to the rear, the following should be done:

1. **Reduce the number of revolutions**
2. **Adjust the cam track to “early crop delivery”.**

6.8 Adjustment of chassis steering

If on even road the rake does not run centrally behind the tractor, an adjustment of the steering can be made.
The adjustment is made at the steering rods of the rear axle.

The adjustment takes place as follows:

- Counter nuts (1) are loosened (wrench size 30)
- Steering rods are adjusted equally
- Counter nuts are tightened again
- Basic adjustment **A**: 990 mm
- Finally check whether the rotary rake runs centrally behind the tractor. This adjustment should be changed if necessary.

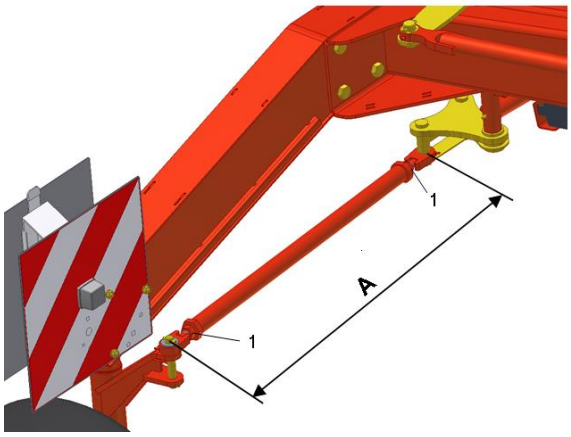

7. SERVICE AND MAINTENANCE OF THE RAKE

7.1 Safety rules

- **Maintenance, service, cleaning and repair must only take place when the PTO and the engine have been stopped. Remove the ignition key!**
- **Take care that oil and grease do not get in contact with your skin.**
- **After the first hours of operation all screws must be re-tightened!**

7.2 General maintenance instructions:

- To obtain high operational safety and minimum wear there are certain maintenance and service intervals which must be observed. This includes e.g. cleaning, greasing and lubrication of parts and components.
- Screws and nuts must be checked after every 50 hours of operation and re-tightened if necessary!
  See the table for torque settings in chapter 2.2.5.
  It is particularly important to check the fixing bolts of the rake tines on the tine arms.
- Only use original spare parts and equipment. There is no warranty on non-original components and the manufacturer is not responsible for any damage resulting from such use.

7.3 Cleaning of the machine and preparation for winter storage

7.3.1 Cleaning of the machine

Caution:

- When cleaning with a high pressure cleaner never spray directly on bearings and hydraulic parts.
- After cleaning, all bearings must be greased carefully until grease comes out of the bearings to ensure that possible water is pressed out.
- When cleaning with high pressure the paint may be damaged.
- Parts polished with use may get rusty.

7.3.2 Placement of the rake in the open

- If the rake is placed in the open for a longer period, all bearings must be greased according to the lubrication schedule.
- Parts polished with use and the piston rods of the hydraulic cylinder must be cleaned and brushed with grease to protect against wind and weather.

7.3.3 Winter storage

- Check the rake for damaged parts, loose screw-joints and leakage. If there is any damage it may be forgotten during the winter and result in problems the following year. Therefore the machine must be checked carefully before the winter storage.
- Grease the rake according to the lubrication chart.
- Clean the machine carefully.
- The machine must be stored in a place where it is protected against wind and weather in the best possible way.
- Check the gear oil and fill up if necessary.
- Parts polished with use must be greased to protect against rust.
- The PTO shafts for the rotors are disconnected at the rotor and separated, the sliding piece is greased and the shafts are reassembled.

7.4 Hydraulic system

- **Liquids under pressure can penetrate the skin. Danger of infection!**
- **In case of personal injury caused by oil under pressure, consult a doctor immediately.**
- **After the first 10 hours of operation all hydraulic screw joints must be re-tightened.**
- **Before working with the rake all hydraulic hoses must be checked for wear and damage.**
  If hydraulic hoses are worn or damaged they must be replaced immediately.

Hydraulic hoses have a natural aging. They are marked with date of production. The law prescribes that hydraulic hoses are replaced after 6 years.

Only use original spare parts when replacing!

When working with the hydraulic system make sure that it is not under pressure!

The rotors must either be locked with the locking pawls or stand firmly on the ground!

7.5 Wheels

- **The wheels must be checked regularly for damage and correct tyre pressure.**
- **Wheel nuts must be checked regularly and re-tightened if necessary!**
- **Repair of wheels should only be made by experts and with correct tools!**
- **Mounting of wheels requires correct mounting tools and must be performed by persons with sufficient knowledge.**
- **When working with the wheels the rake must be secured so that it cannot move!**

7.5.1 Tyre pressure

The tyre pressure must be checked regularly and adjusted if necessary. The required tyre pressure is shown in the below table:

Place	Wheels	Tyre pressure (bar)
Rotor chassis	16x6,50-8 (10PR)	2.2
Transport chassis	10.0/75-15.3 (8PR)	2.5
Transport chassis wide tyres	13.0/55-16	2.5

Caution: If the pressure is too high the tyres may crack. If the pressure is too low the tyres may be damaged due to deformation of the tyre wall.

7.6 PTO shafts

When working with the PTO shafts:

- **Stop the engine!**
- **Remove the ignition key!**

Instructions regarding PTO shafts:

- Never use PTO shafts without guards or if guards are damaged. Risk of personal injury!
  Missing or damaged protection tubes and covers must be replaced immediately.
- Secure the protection so that it cannot turn with the shaft!
- Only use PTO shafts that are approved by the manufacturer!
- Grease the PTO shafts carefully according to the lubrication chart.

7.7 Replacement of bearing units

If a bearing unit is damaged it can be replaced without disassembling the whole rotor.

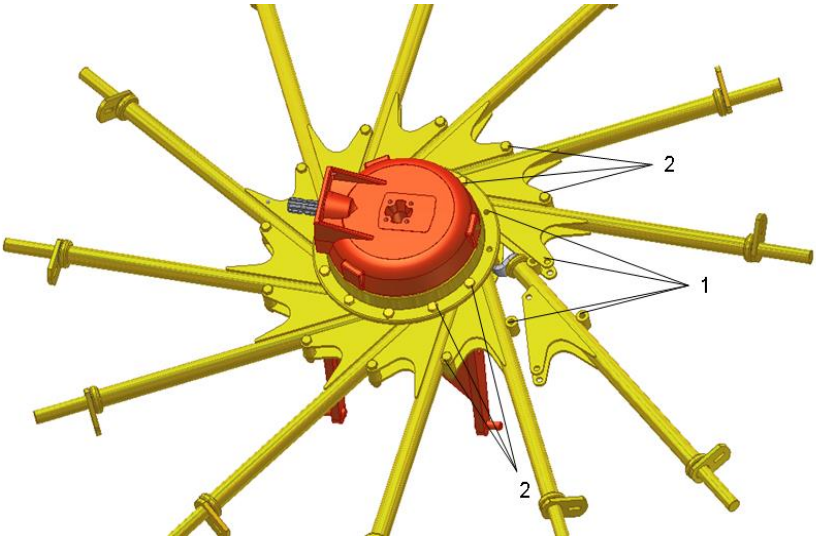

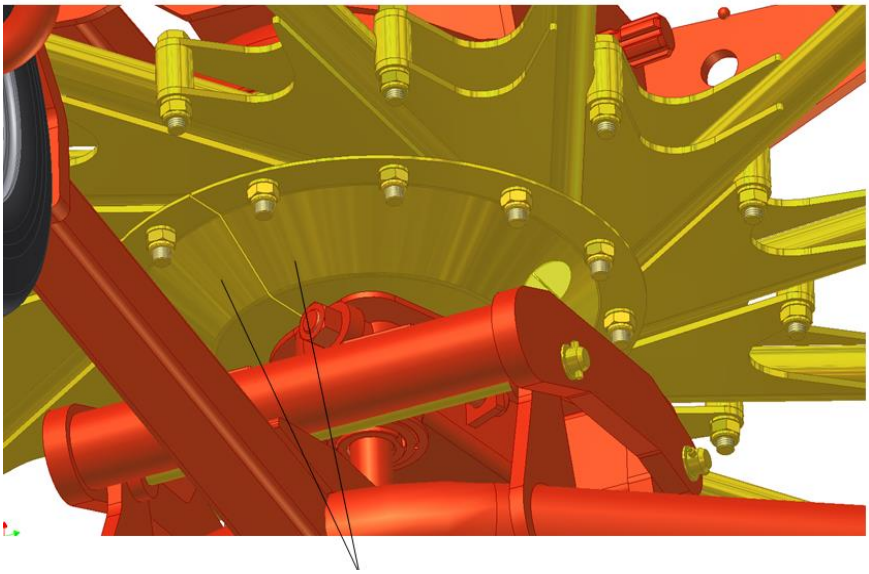

Divided cover plate (3)

Procedure when replacing the bearing unit:

- The fixing screws (1) of the bearing unit are removed.
- The fixing screws at the bearing units beside (2) are loosened.
- The nuts on the divided cover plate in question are loosened so that there is enough space for the bearing unit to be pulled out.
- The bearing unit is pulled out and the new one is placed.
- The bearing unit is placed in the cam track – **note:** The roller must be placed in the roller path of the cam track.
- All screws are tightened with the prescribed torque moment.
    - Screws inner circle M14x1.5x90: 160 Nm
    - Screws outer circle M14x70: 145 Nm

8. GREASING

- **Maintenance, service, cleaning and repair must only take place when the PTO and the engine have been stopped. Remove the ignition key!**
- **Take care that oil and grease do not get in contact with your skin.**
- **Greasing of the machine must take place in working position and with lowered rotors. Exception: Greasing of the cam track; here the locking pawls must be safely locked in transport position!**

This chapter describes all grease points as well as service intervals. The observance of the following instructions is a precondition for the operational safety of the machine.

8.1 PTO shafts

The rotary rakes R+760 and R+820 are equipped with four PTO shafts each.

a. Wide angle PTO shaft from tractor to machine
b. The stiff PTO shaft under the frame for the gear
c. Two PTO shafts from gearbox to rotor

The picture shows PTO shaft **a** with normal joint and wide angle joint. The stiff shaft **b** with normal joint and the shafts **c** with two normal joints are greased correspondingly.

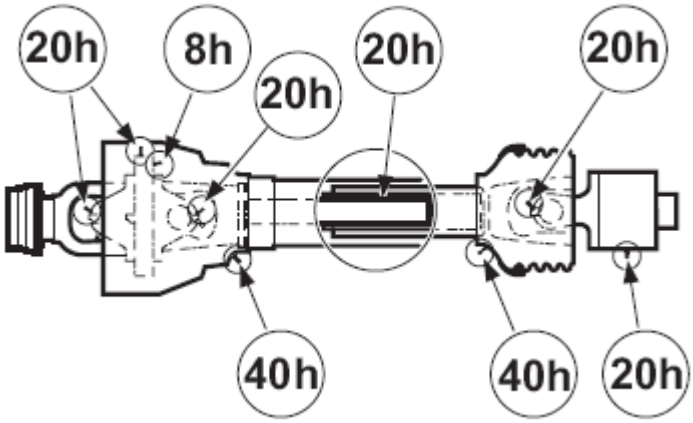

The instruction manual from the manufacturer of PTO shafts is enclosed. The instructions in this manual must be observed!

8.2 Grease spots on the rake:

8.2.1 Steering

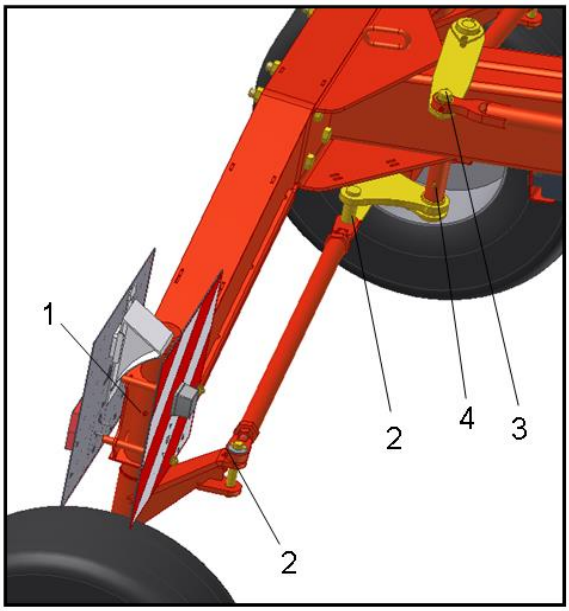

1. Steering knuckle (both sides)
- monthly/ 200 hours -

2 grease points

2. Steering rod (left and right)
- monthly/ 200 hours -

4 grease points

3. Steering rod eye
- monthly/ 200 hours -

1 grease point

4. Steering rod eye
- monthly/ 200 hours -

1 grease point

5. Steering rod front
- monthly/ 200 hours -

1 grease point

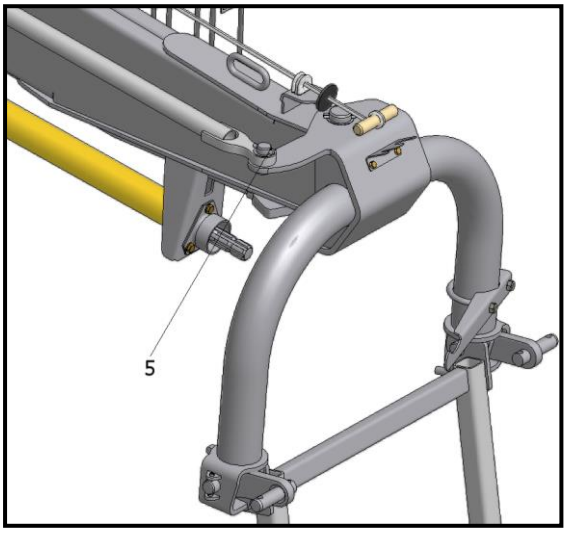

8.2.2 Locking pawls and lifting cylinder

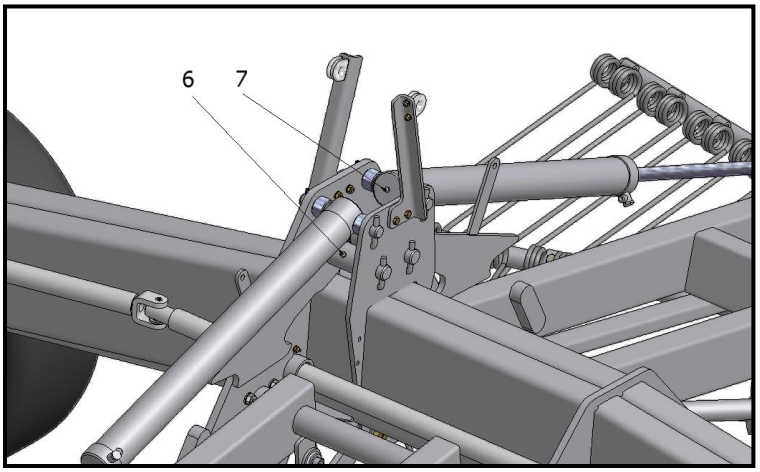

6. Locking pawls
(left and right)
- weekly/ 50 hours -

2 grease points

7. Lifting cylinder
- weekly/ 50 hours -

2 grease points

8.2.3 Suspension

8. Bearing suspension
- weekly/ 50 hours -

1 grease point

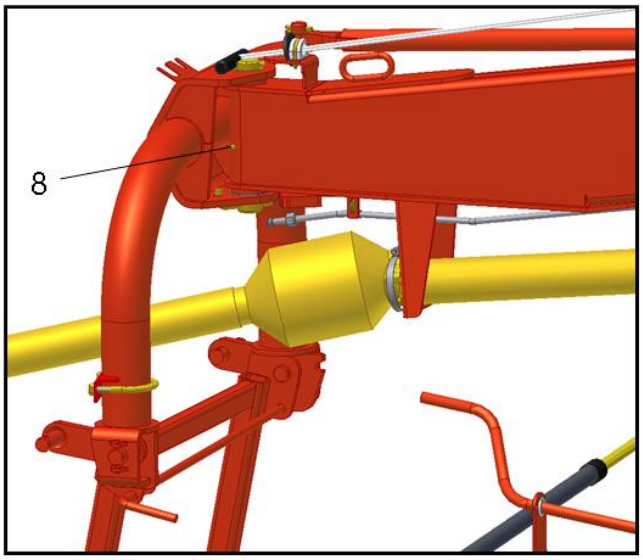

8.3 Grease points at rotor

8.3.1 Rotor gear

9. Rotor housing /disc wheel
(both rotors)
- daily/8 hours

2 grease points

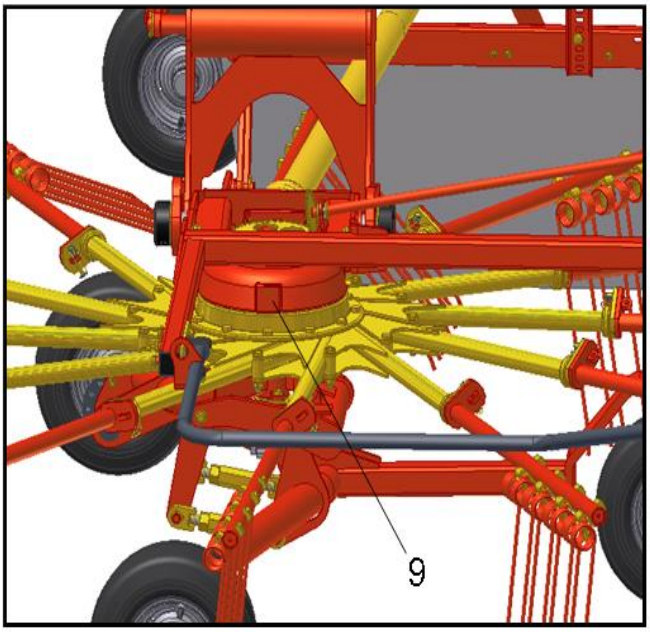

8.4 Grease chart overview

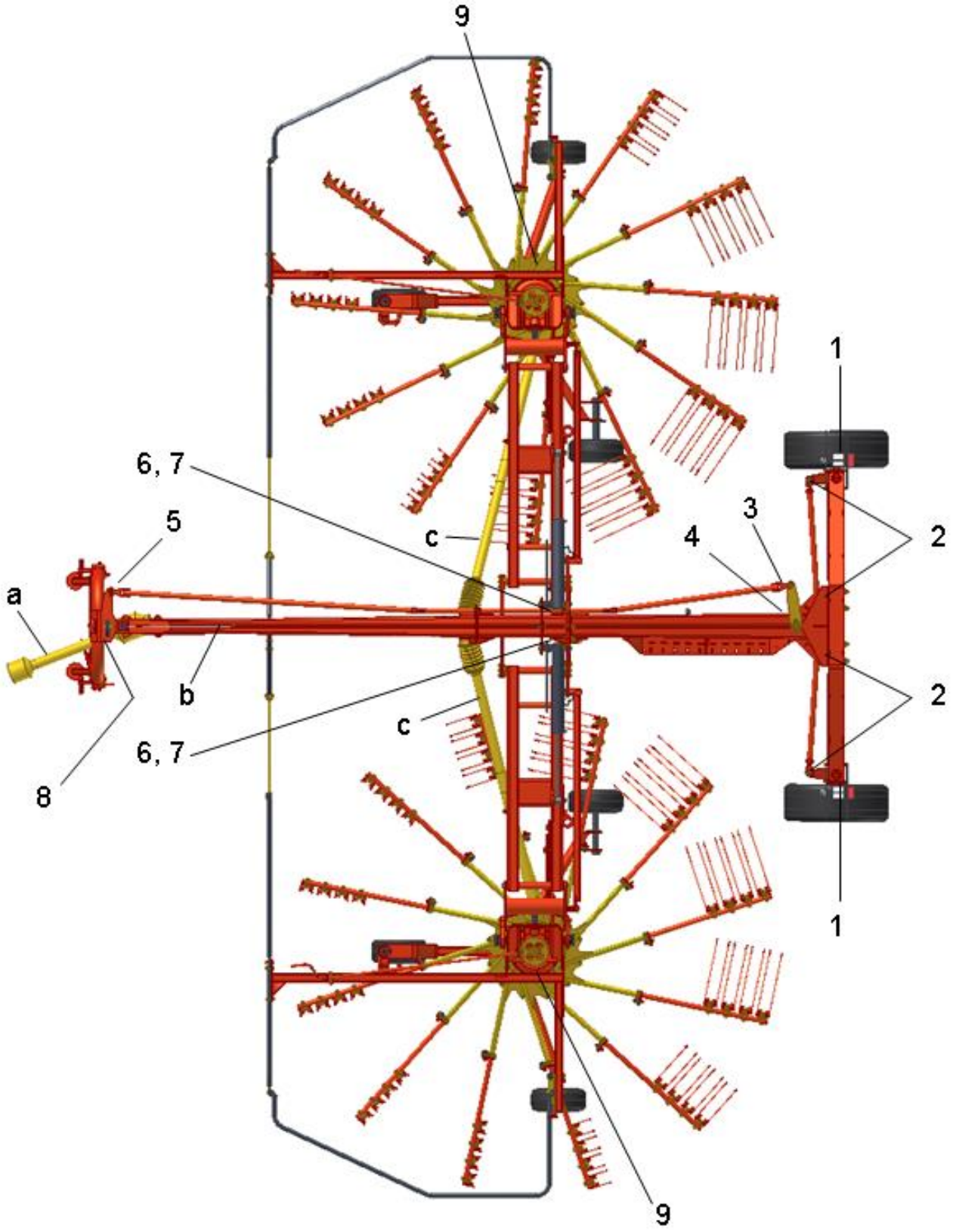

8.5 Bevel gearbox

The bevel gear is maintenance-free.

If gear oil is to be filled up due to loss of oil or repair:

Oil content: 1l
Oil type: Gear oil SAE 90

On the grease chart overview the position of the gear is shown with number **11**.

Drained oils must be handed over to a destruction company!

9. MACHINE DISPOSAL:

When the machine is worn-out it must be disposed of in a proper way. Observe the following:

- The machine must not be placed somewhere outside, - it must be emptied of oil (gearboxes and hydraulic system). These oils must be handed over to a destruction company.
- Disassemble the machine and separate the individual parts, e.g. tyres, hydraulic hoses, hydraulic valves etc.
- Hand over the usable parts to an authorised recycling centre. The large scrapping parts are handed over to an authorised breaker's yard.

10. SUPPLEMENT

Translation from Norm EN ISO 4254-10

Supplement C
(informative)

Stability with the combination tractor – rotary tedder and rake

This supplement concerns 6.1.f) in this part of ISO 4254 which deals with the requirement of informing of possible loss of the tractor's stability due to the connection of the machine.

The following text is a suggestion to the manufacturer with the purpose of making it possible for him to provide suitable and complete information.

The example concerns a rotary tedder and rake connected to a tractor.

Due to the own weight of the machine, the combination tractor – rotary tedder and rake can become unstable. In order to test the total stability the following formula can be used for the calculation of the minimum front ballast $I_{F,min}$ at a minimum front axle load of 20% of the tractor's own weight:

$$I_{F,min} = \frac{(I_R \times (c+d)) - (T_F \times b) + (0{,}2 \times T_E \times b)}{a+b}$$

ANNOTATION In this calculation rear-mounted implements and front/rear combinations have been taken into consideration.

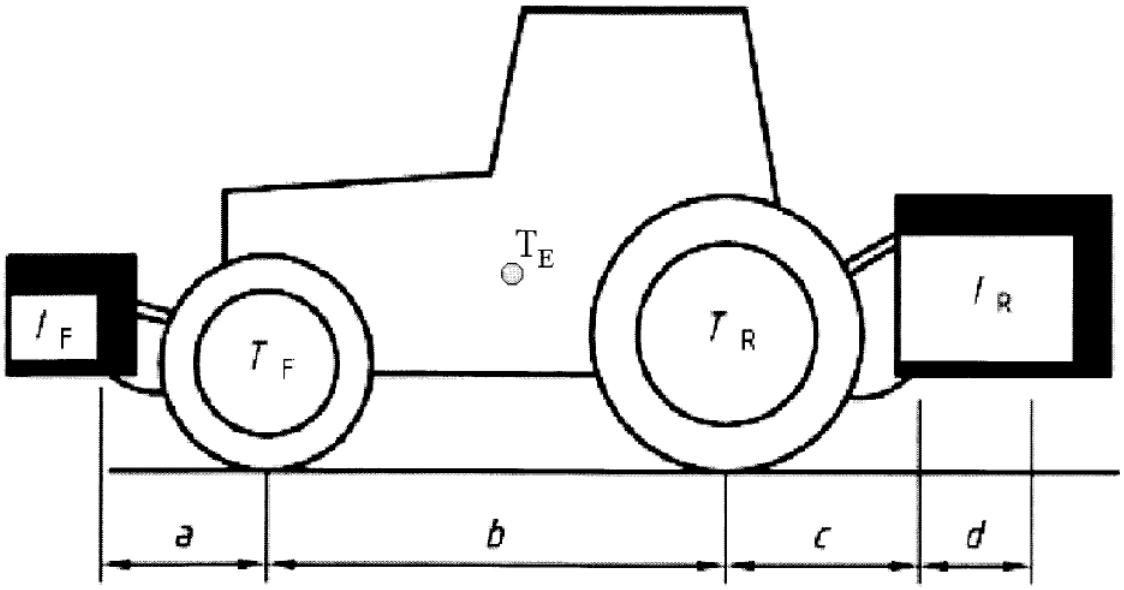

List of signs

T_E [kg]	The tractor's own weight	**1)**
T_F [kg]	Front axle load with empty tractor	**1)**
T_R [kg]	Rear axle load with empty tractor	**1)**
I_R [kg]	Total weight rear-mounted implement/rear ballast	**2)**
I_F [kg]	Total weight front-mounted implement/front ballast	**2)**
a [m]	Distance between centre of gravity front-mounted implement/front ballast and middle of front axle	**2) 3)**
b [m]	The tractor's wheel distance	**1) 3)**
c [m]	Distance between middle of rear axle and middle of link arm balls	**1) 3)**
d [m]	Distance between middle of link arm balls and centre of gravity rear mounted implement/rear ballast	**2)**

1) see instruction manual for the tractor
2) see price list and/or instruction manual for the implement
3) to be measured

Picture B.1 **Example of references to stability of the combination tractor – rotary tedder and rake**

11. WARRANTY

Your machine is warranted according to legal rights in your country and the contractual agreement with the selling dealer. No warranty shall, however, apply if the machine has not been used, adjusted and maintained according to the instructions given in this operator's manual.
It is prohibited to carry out any modifications to the machine unless specifically authorized, in writing, by a NEW HOLLAND representative.

EF-overensstemmelseserklæring/ EG-Konformitätserklärung/ EC Declaration of Conformity/ Déclaration CE de conformité/ Dichiarazione CE di conformita/ EG Verklaring van Overeenstemming/ EG-försäkran om överensstämmelse/ EY-vaatimustenmukaisuusvakuutus/ Declaración de conformidad CE/ Deklaracja Zgodności WE./ Декларация за съответствие ЕО/ EK Megfelelőségi Nyilatkozat /ES Prohlášení o shodě/ EB Atitikties deklaracija/ ES prehlásenie o zhode/ Declaraţia de conformitate CE/ Vastavuse Deklaratsioon EÜ /ES Izjava o skladnosti/ Δήλωση πιστότητας ΕΚ/ Declaração de fidelidade CE/ Dikjarazzjoni ta' Konformità tal-KE/ EK Atbilstības deklarācija/

Fabrikant/ Hersteller/ Manufacturer/ Fabricant/ Produttore/ Fabrikant/ Fabrikant/ Valmistaja/ Fabricante/ Producent/ Производител/ Gyártó/ Výrobce/ Gamintojas/ Výrobca/ Producător/ Tootja/ Proizvajalec/ Κατασκευαστής/ Fabricante/ Fabbrikant/ Ražotājs

CNH INDUSTRIAL BELGIUM N.V.

Leon Claeysstraat 3a, 8210 Zedelgem, BELGIUM

Repræsenteret af Antoon Vermeulen, Leon Claeysstraat 3A, B8210 Zedelgem (Belgien), som også har tilladelse til at indsamle teknisk dokumentation / vertreten durch Antoon Vermeulen, Leon Claeysstraat 3A, B8210 Zedelgem (Belgium), der auch autorisiert ist, die technische Akte zu erarbeiten / represented by Antoon Vermeulen, Leon Claeysstraat 3A, B8210 Zedelgem (Belgium), who is also authorised to compile the Technical File / Répresentés par Antoon Vermeulen, Leon Claeysstraat 3A, B8210 Zedelgem (Belgique), également autorisé à constituer le dossier technique / rappresentati da Antoon Vermeulen, Leon Claeysstraat 3A, B8210 Zedelgem (Belgio), autorizzato a compilare il File tecnico / vertegenwoordigd door Antoon Vermeulen, Leon Claeysstraat 3A, B8210 Zedelgem (Belgium), die tevens is gemachtigd om het Technisch Bestand samen te stellen / representerade av Antoon Vermeulen, Leon Claeysstraat 3A, B8210 Zedelgem (Belgien), som också har behörighet att sammanställa den tekniska dokumentationen / edustajamme Antoon Vermeulenin, osoite Leon Claeysstraat 3A, B8210 Zedelgem (Belgium) välityksellä, jolla on myös oikeus laatia tekninen tiedosto / representados por Antoon Vermeulen, Leon Claeysstraat 3A, B8210 Zedelgem (Bélgica), quien además está autorizado para recopilar el documento técnico / której przedstawicielem jest Antoon Vermeulen, Leon Claeysstraat 3A, B8210 Zedelgem (Belgia), który jest również upoważniony do sporządzania dokumentacji technicznej / представлявани от Антоон Вермьолен, Leon Claeysstraat 3A, B8210 Zedelgem (Белгия), с упълномощение също да състави Техническото досие / akiket képvisel: Antoon Vermeulen, Leon Claeysstraat 3A, B8210 Zedelgem (Belgium), aki szintén jogosult a műszaki dokumentumok összeállítására / v zastoupení Antoon Vermeulen, Leon Claeysstraat 3A, B8210 Zedelgem (Belgium), s autorizací k tvorbě technického souboru / atstovaujami Antoon Vermeulen, Leon Claeysstraat 3A, B8210 Zedelgem (Belgija), taip pat turintis teisę sudaryti technines bylas / v zastúpení Antoonom Vermeulenom, Leon Claeysstraat 3A, B8210 Zedelgem (Belgicko), ktorý je oprávnený zostavovať technickú dokumentáciu / reprezentaţi de Antoon Vermeulen, Leon Claeysstraat 3A, B8210 Zedelgem (Belgia), care este, de asemenea, autorizat să compileze dosarul ethnic / esindajatega Antoon Vermeulen, Leon Claeysstraat 3A, B8210 Zedelgem (Belgia), kellel on samuti luba tehnilise faili koostamiseks / ki nas zastopa Antoon Vermeulen, Leon Claeysstraat 3A, B8210 Zedelgem (Belgija), ki je pooblaščen tudi za sestavo tehnične dokumentacije / εκπροσωπούμενοι από τον Antoon Vermeulen, Leon Claeysstraat 3A, B8210 Zedelgem (Βέλγιο), με εξουσιοδότηση και για τη σύνταξη του Τεχνικού φακέλου / representados por Antoon Vermeulen, Leon Claeysstraat 3A, B8210 Zedelgem (Bélgica), que também tem autorização para compilar o Ficheiro Técnico / irrappreżentata minn Antoon Vermeulen Leon Claeysstraat 3a, B8210 Zedelgem (Belġju), min huwa wkoll awtorizzat li tiġbor l-Fajl Tekniku / Antoon Vermeulen, Leon Claeysstraat 3A, B8210, Zedelgem (Belgium), pārstāvēti, kas ir pilnvarots arī sastādīt tehnisko reģistru

Erklærer hermed, at/ Erklären hiermit, daß/ Hereby declare that/ Déclare par la présente que/ Dichiara che/ Verklaren hierbij dat/ Försäkrar härmed, att/ Vakuuttaa täten, että tuote/ Por el presente declara que/ Niniejszym deklaruje, że/ Декларирам, че/ Az alábbiakban kijelentem, hogy/ Tímto prohlašuje, že/ Deklaruoja, kad/ Týmto prehlasujeme, že/ Prin prezenta declar că/ Alljärgnevaga deklareerib, et/ Izjavljamo, da je/ Με το παρόν δηλώνω ότι/ Abaixo declara que **/** Jiddikjaraw li / Apstiprinu, ka

Maskine:	La máquina:	Masin:
Maschine:	Maszyna:	Stroj:
Machine:	Машината:	Η μηχανή:
Machine:	Gép:	Máquina:
La macchina:	Stroj:	Il-magna:
Machine:	Mašina:	Mašīna:
Maskin:	Stroj:	
Laite:	Maşina:	

Model/Type**: R+760, R+820**
Designation: Rake
Serial:

- er i overensstemmelse med Maskindirektivets bestemmelser (Direktiv 2006/42/EF) og hvis relevant også bestemmelserne i EMC-direktivet 2014/30/EU.

- In übereinstimmung mit den Bestimmungen der Maschinen-Richtlinie 2006/42/EG und wenn erforderlich auch mit der EMC-Richtlinie 2014/30/EU hergestellt wurde.

- is in conformity with the provisions of the Machinery Directive 2006/42/EC and if relevant also the provisions of the EMC Directive 2014/30/EU.

- est conforme aux dispositions de la Directive relatives aux machines 2006/42/CE et également aux dispositions de la Directive sur la Directive EMC 2014/30/UE.

- é in conformita' con la Direttiva Macchine 2006/42/CE e, se pertinente, anche alla Direttiva alla Direttiva EMC 2014/30/UE.

- in overeenstemming is met de bepalingen van de Machine richtlijn 2006/42/EG en wanneer relevant ook met de bepalingen van de EMC richtlijn 2014/30/EU.

- är i överensstämmelse med Maskindirektivets bestämmelser (Direktiv 2006/42/EG) ock om relevant också bestämmelserne EMC-direktivet 2014/30/EU.

- täyttää Konedirektiivin (Direktiivi 2006/42/EY) määräykset ja oleellisilta osin myös EMC-direktiivin 2014/30/EU.

- es conforme a la Directiva de Maquinaria 2006/42/CE y, si aplica, es conforme también a la Directiva EMC 2014/30/EU.

- pozostaje w zgodzie z warunkami Dyrektywy Maszynowej 2006/42/WE i jeżeli ma to zastosowanie również z warunkami Dyrektywy dot. kompatybilności elektro magnetycznej EMC 2014/30/UE.

- отговаря на изискванията на Директивата за Машините 2006/42/ЕО и ако има приложение на изискванията на Директивата за електромагнитна съвместимост 2014/30/ЕС.

- Megfelel a 2006/42/EK Gépi Eszközökre vonatkozó előírásoknak és amennyiben felhasználásra kerül, a 2014/30/EU Elektromágneses kompatibilitás Irányelv feltételeinek.

- odpovídá základním požadavkům Strojní směrnice 2006/42/ES a jestliže to její uplatnění vyžaduje i s podmínkami Směrnice 2014/30/EU týkající se elektromagnetické kompatibility.

- atitinka Mašinų direktyvos Nr. 2006/42/EB ir, jeigu taikoma, Elektromagnetinio suderinamumo direktyvos Nr. 2014/30/ES reikalavimus.

- je v súlade s podmienkami Smernice 2006/42/ES o strojných zariadeniach a pokiaľ si to jeho uplatnenie vyžaduje aj s podmienkami Smernice 2014/30/EÚ o elektromagnetickej kompatibilite.

- îndeplineşte prevederilor Directivei de Maşini 2006/42/CE şi dacă este utilizată de asemenea cu prevederile Directivei referitoare la compatibilitatea electro-magnetică EMC 2014/30/UE.

- on vastavuses Masinate Direktiivi tingimustega 2006/42/EÜ ning sammuti juhul, kui on tegemist sammuti on vastavuses Elektromagnetilise kokkusobivuse Direktiivitingimustega EMC 2014/30/EL.

- z določili Direktive o strojih 2006/42/ES ter, če je to relevantno, tudi z določili EMC Direktive 2014/30/EU.

- παραμένει σύμφωνη με τους όρους της Οδηγίας περί Μηχανών 2006/42/ΕΚ και σε περίπτωση που αυτό εφαρμόζεται και με τους όρους της Οδηγίας περί ηλεκτρομαγνητικής συμβατότητας (ΗΜΣ) 2014/30/ΕΕ.

- Está de acordo com exigências das Directivas das Maquínarias 2006/42/CE e no caso em que tiver igualmente aplicação com as exigências das Directivas referentes a compatibilidade electromagnética EMC 2014/30/UE.

- tikkonforma mad-dispożizzjonijiet tad-Direttiva dwar il-Makkinarju 2006/42/KE u jekk rilevanti wkoll mad-dispożizzjonijiet tad d-Direttiva EMC 2014/30/EU.

- atbilst mašīnu direktīvai 2006/42/EK, kā arī nepieciešamības gadījumā elektromagnētiskās saderības direktīvai EMC 2014/30/ES.

Zedelgem, date:

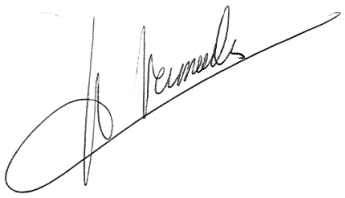

Antoon Vermeulen

Dealer's stamp

CNH Industrial Belgium N.V. reserves the right to make improvements in design and changes in specifications at any time without notice and without incurring any obligation to install them on units previously sold. Specifications, descriptions, and illustrative material herein are as accurate as known at time of publication, but are subject to change without notice.

Availability of some models and equipment builds varies according to the country in which the equipment is being used. For exact information about any particular product, please consult your Kongskilde dealer.

KONGSKILDE